Catalogue 2020

Nice

Industrial Door.

Automation and management systems for industrial doors catalogue.

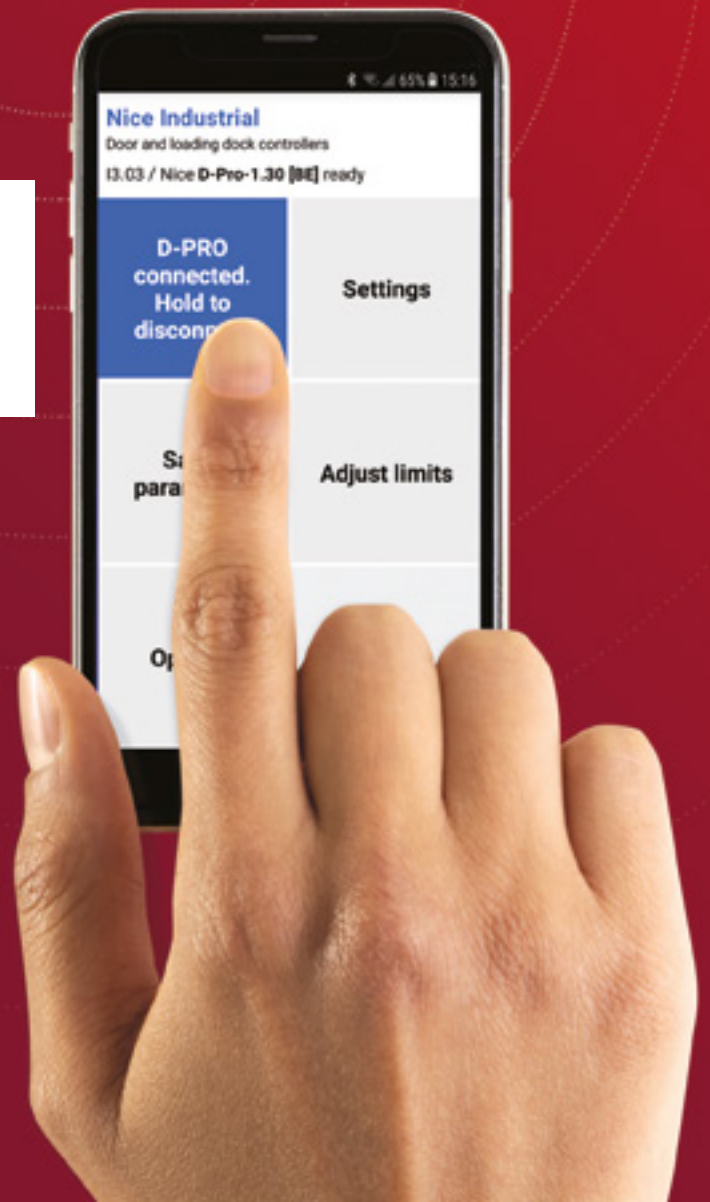

Nice opens up your business

Powerful and safe automation systems, easy to install and program.

Nice
EXIT

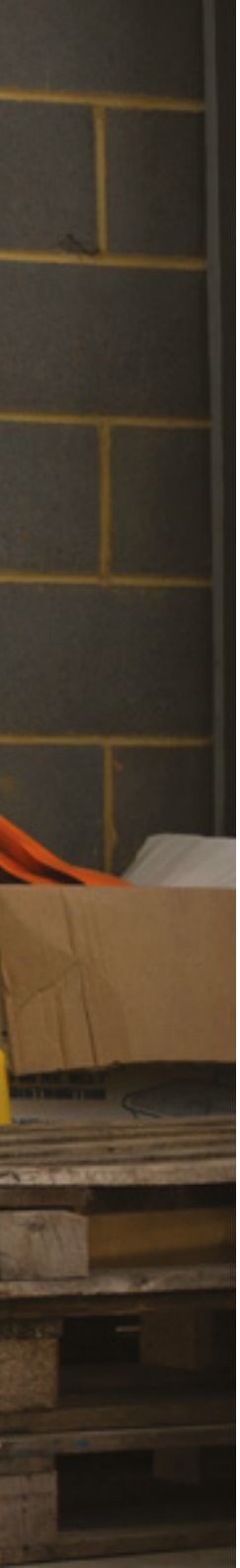

The strength of the Nice solutions

Reliable and versatile control units for industrial and commercial doors. Numerous functions at your fingertips.

D-Pro Action

Extreme ease
of installation and use.

D-Pro Automatic

The most advanced
and versatile on the market.

D-Pro Action

Easy to program and to use

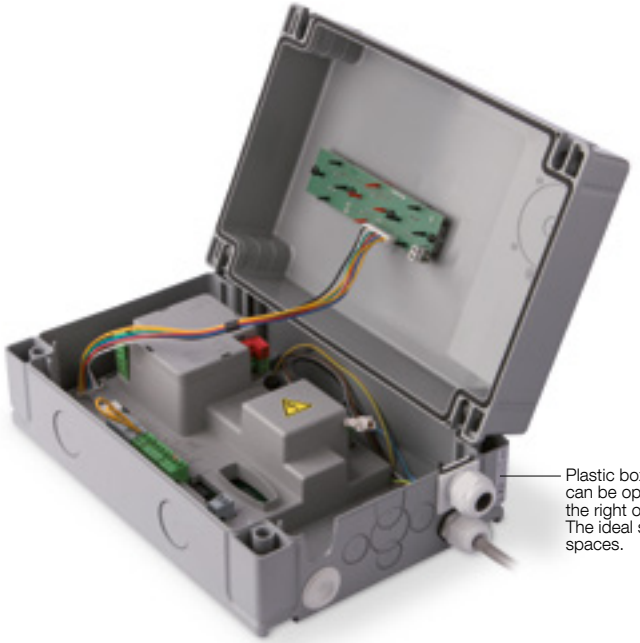

Plastic box, more practical, can be opened on either the right or left side. The ideal solution in confined spaces.

Practical door operation with Up - Stop - Down buttons on the box cover

Long-lasting and very resistant in wet and dusty environments

Control units for motors with mechanical limit stop or electronic limit switch, both automatic and deadman operation.

Suitable for all types of motor, single phase without integrated inverter and three-phase, with 2.2 kW maximum power.

Easy programming and 2 LEDs for diagnostics.

High performance, with possibility of adding a dedicated module for optional potential free outputs. Compatible with all types of sensitive edges, including wireless.

User-friendly: thanks to the O-View programmer with multifunction display for connection through the IBT4N interface (both optional).

Safe: protected by a plastic shell, to avoid any risk of electrical shock.

Radio receiver: dedicated slot to connect a Nice OXI plug-in receiver.

Smart, the maintenance service warning can be programmed according to the number of manoeuvres required.

ACCESSORIES FOR D-PRO ACTION CONTROL UNITS

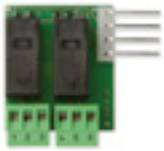

NDA040
For optional potential free outputs.

IBT4N
Interface module for O-View programmer connection.

OVIEW
Control unit programming and monitoring device.

IT4WIFI
Smart Wi-Fi interface to control via smartphone Nice automations compatible with the BusT4 (Opera) protocol.

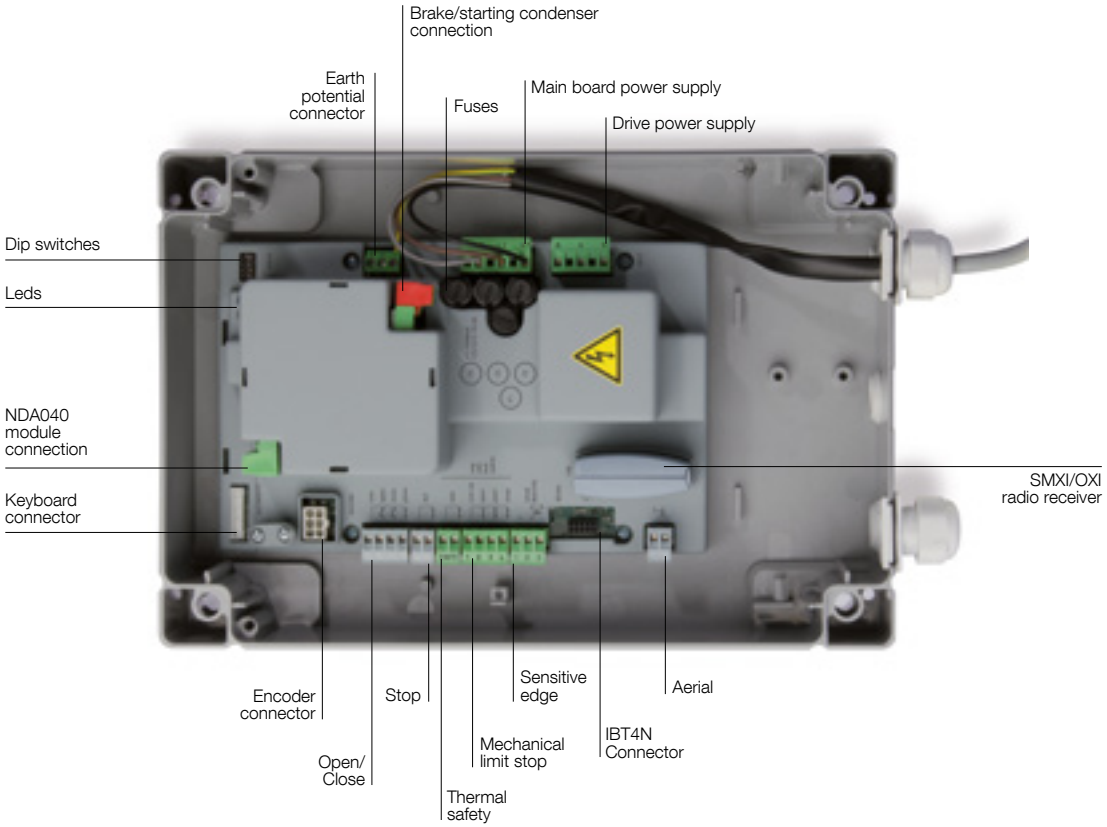

D-PRO ACTION CONTROL UNITS

Code	Description	Pcs./Pack
NDCC2000	Control unit for one motor, 400 Vac three-phase, 2.2 Kw	1
NDCC2100	Control unit for one motor, 400 Vac three-phase with integrated brake rectifier, 2.2 kw	1
NDCC2200	Control unit for one motor, 230 Vac single-phase, with integrated condenser control, 2.2 kw	1

ADDITIONAL MODULES

Code	Description	Pcs./Pack
NDA040	Additional module providing the control unit with two potential free programmable outputs	1
IBT4N	Additional interface enabling the control unit to communicate with O-View through the nice BusT4 technology	1
OVIEW	Unit for control, programming and diagnostics of the control unit	1
IT4WIFI	Smart Wi-Fi interface to control via smartphone Nice automations compatible with the BusT4 (Opera) protocol.	1

TECHNICAL SPECIFICATIONS

Code	**NDCC2000/NDCC2100**	**NDCC2200**
Power supply (Vac 50/60 Hz)	400	230
Max motor power (kW)	2.2	
Power in standby (W)	< 5	
Pre limit input	programmable	
External inputs	Up, Down and Photo (programmable)	
Stop input	For sensitive edges of a normally closed and normally open type, opticals, 8.2 KΩ resistive and 8.2 KΩ pneumatic	
Extra output	2 free programmable and potential free contacts (by means of NDA040 module)	
Services Output	24 Vdc max 0.1 A	
Operating temperature (°C)	-20 ÷ +50	
Protection class (IP)	55	
Dimensions (mm)	210x125x310 h	
Weight (kg)	2.5	

D-Pro Automatic

The most advanced and versatile

Plastic box, more practical, can be opened on either the right or left side. The ideal solution in confined spaces.

Easy programming, immediate reading of system status and diagnostics by means of the large 4-digit display integrated in the cover

Practical door operation with Up - Stop - Down buttons on the box cover

Control units for motors with mechanical limit stop or electronic limit switch, both automatic and deadman operation. In compliance with all European norms and certified by TÜV NORD CERT GmbH.

Suitable for almost all industrial motors on the market, single phase with or without integrated inverter and three-phase, with 5.5 kW maximum power.

Easy programming and immediate diagnostics thanks to the 4-digit display integrated in the cover.

High performance, with possibility of adding dedicated modules for additional functions such as traffic lights and loop detectors and to connect external transmitters. Compatible with all types of sensitive edges, including wireless.

The ideal solution for interlocking doors: thanks to the dedicated function, the control unit can be used to operate a number of doors in succession, to restrict or control entry to and from areas that need to be secured against two or more doors being open simultaneously.

Safe: protected by a plastic shell, to avoid any risk of electrical shock.

Radio receiver: dedicated slot to connect a Nice OXI plug-in receiver.

Smart, the maintenance service warning can be programmed according to the number of manoeuvres required.

Customizable: further button configurations are available on request, such as emergency stop switch.

The TÜV NORD CERT GmbH certification and compliance with EN 12453:2014 mean safety in all situations.

ADDITIONAL MODULES FOR D-PRO AUTOMATIC CONTROL UNITS

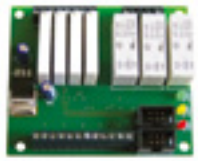

NDA030
For a two-way traffic light and extra programmable inputs/outputs

NDA070
For vehicle detection by induction coils

NDA004
Programming and installation module.

App Nice Industrial

For control unit programming by android smartphone or tablet through Bluetooth connection.

Download on the App Store

GET IT ON Google Play

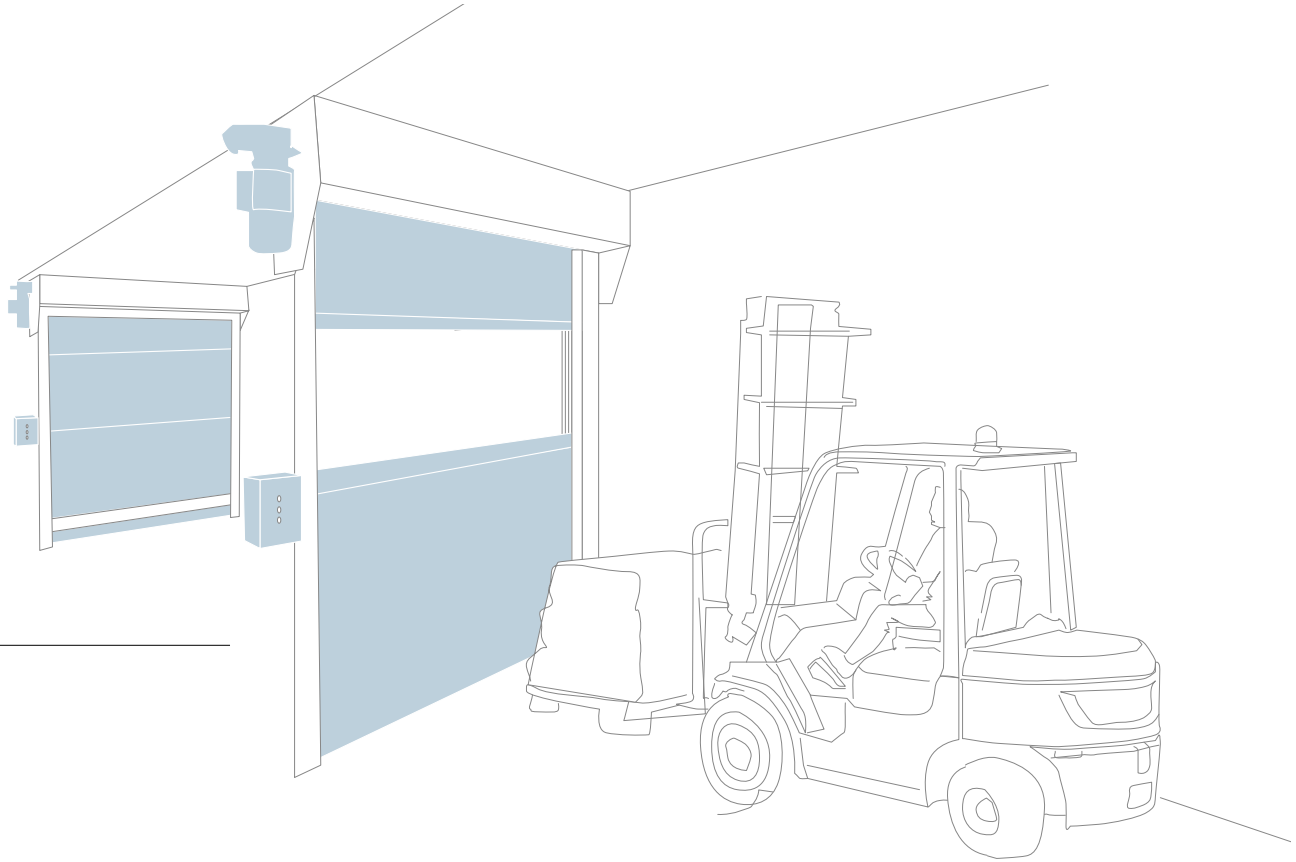

THE ADVANTAGES OF THE NICE AUTOMATION SYSTEM

The integrated interlocking function allows two or more doors to be operated in succession: the ideal solution for cold storage facilities

D-PRO AUTOMATIC CONTROL UNITS

Code	Description	Pcs./Pack
NDCC1000	Control unit for one motor, 400 Vac, three-phase, 2.2 Kw	1
NDCC1100	Control unit for one motor, 230 Vac with integrated inverter, 2.2 Kw	1
NDCC1200	Control unit for one motor, 230 Vac single-phase, 2.2 kW	1
NDCC1003	Control unit for one motor, 400 Vac, three-phase, 5,5 kW	1

ADDITIONAL MODULES

Code	Description	Pcs./Pack
NDA030	Additional I/O expander for D-Pro Automatic control unit with two-way traffic lights function, six more general purpose inputs and four potential free outputs	1
NDA070	Additional 1 or 2 channels module for induction coils connection (12-24 Vdc) with numerous programmable functions	1

TECHNICAL SPECIFICATIONS

Code	**NDCC1000**	**NDCC1100/NDCC1200**	**NDCC1003**
Power supply (Vac 50/60 Hz)	400	230	400
Max motor power (kw)	2.2		5.5
Power in standby (W)	< 4		
Pre limit input	programmable		
External inputs	Up, Down, Stop, Step-by-step, all programmable		
Outputs	3 free programmable outputs		
Stop input	For sensitive edges of a normally closed and normally open type, opticals, 8.2 KΩ resistive and 8.2 KΩ pneumatic		
Services Output	24 Vdc 600 mA		
Operating temperature (°C)	-20 ÷ +50		
Protection class (IP)	55		
Dimensions (mm)	210x125x310 h		
Weight (kg)	3.5		

Additional tools for more functions

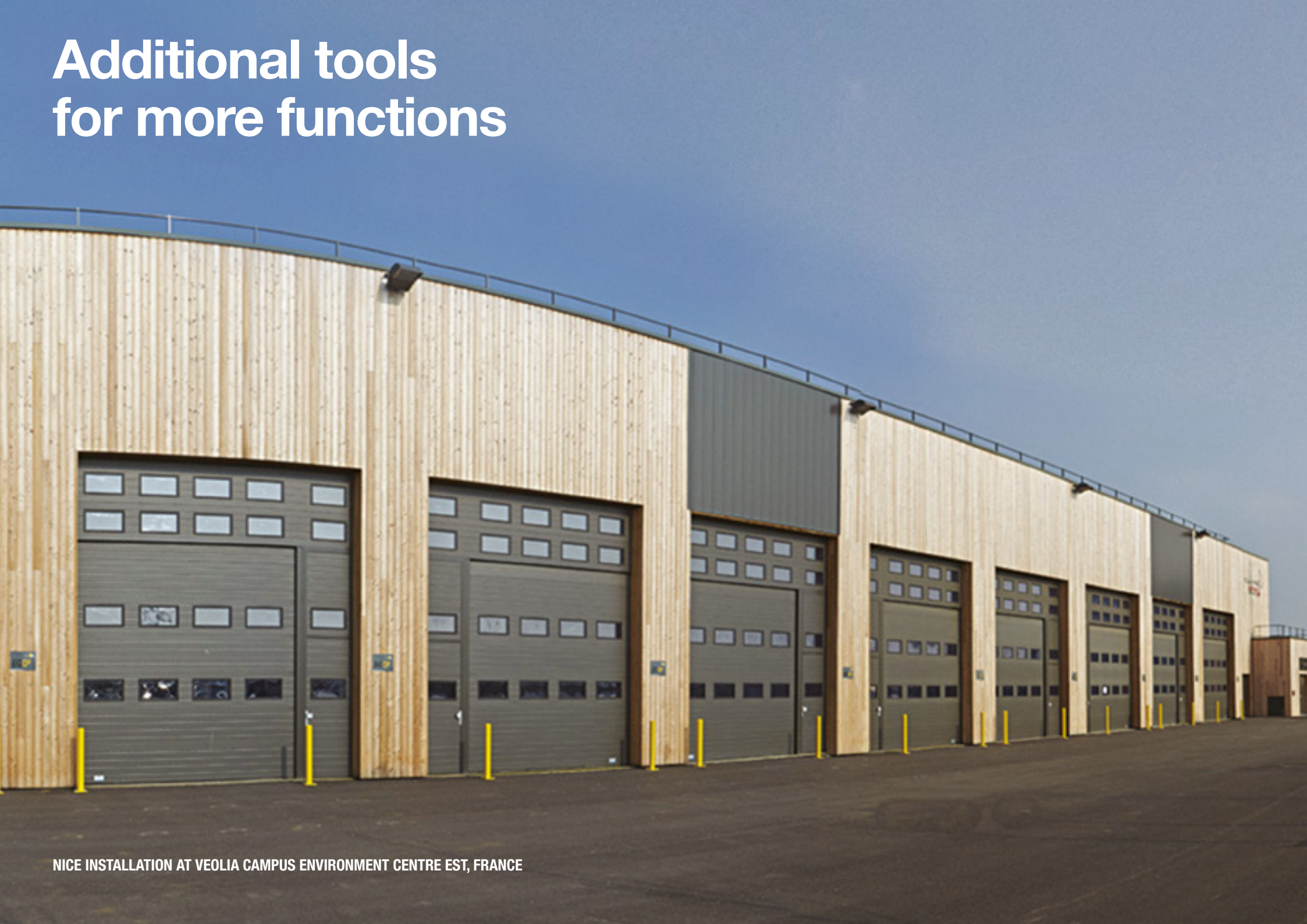

NICE INSTALLATION AT VEOLIA CAMPUS ENVIRONMENT CENTRE EST, FRANCE

D-Pro Monitoring and interface modules

For industrial doors control and management

NDA004
Programming
and installation module.

NDA006
Communication module.

NDA008
Repeater module
with integrated router.

Modules for the continuous remote monitoring, control and management of industrial doors, including via internet, simply and quickly.

Nice Industrial Configuration Tools
Innovative system to simplify installation, control and monitoring of industrial automation systems. Configuration software tools and the App for the D-Pro Automatic control unit for the **complete management of complex industrial doors systems by PC, smartphone or tablet.**

By adding the NDA006 communication module to each D-Pro Automatic control unit, all the working parameters of the system can be transferred and reported to a NDA008 central control unit using a two-wires CAN field bus. The interface allows connection to PCs or servers via intranet or internet connection and also access to D-Pro Automatic parameters, including remotely, to modify them or read the error code history and life cycle.

The ideal solution for large installations, such as logistic centres.
The NDA008 module with integrated router, LAN and USB connections, allows you to access the system remotely, checking it in real time thanks to the possibility of connecting a web cam. Via the management software, the information is accessible directly from a PC connected to an external server.

Better customer support, thanks to more information available.
Collected data may be stored in a central SQL database for further analysis and reporting and can be used for maintenance planning.

Firmware upgrade and bluetooth connection
The NDA004 module for bluetooth connection between D-Pro Automatic and portable devices, smartphones or tablets.
The module can be used to program the limit positions and store the D-Pro Automatic control unit parameters by means of the new application.
The NDA004 allows easy upgrade of the firmware version and transfer of the stored settings from one D-Pro Automatic to another, for quick programming of a group of control units.

NICE INDUSTRIAL CONFIGURATION TOOL

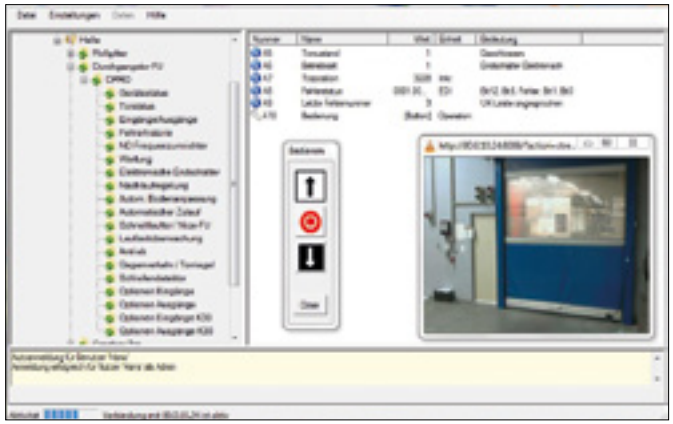

Software for system configuration by PC.

App Nice Industrial

For control unit programming by android smartphone or tablet through Bluetooth connection.

Download on the App Store

GET IT ON Google Play

Codice	Descrizione	PZ./CONF.
NDA004	Additional module for programming the control unit with the app Nice Industrial through the Bluetooth connection and for quick firmware upgrades or parameters storage	1
NDA006	Additional module for Internet and Intranet communication between D-Pro Automatic control units. To be used in combination with the repeater module NDA008 in order to create a network of remotely controllable ports	1
NDA008	Repeater module with graphic display, in plastic box, to control up to 30 communication modules	1

Take advantage of the Nice automation system

More services at your fingertips

The solution for the control of industrial doors, always at your fingertips.

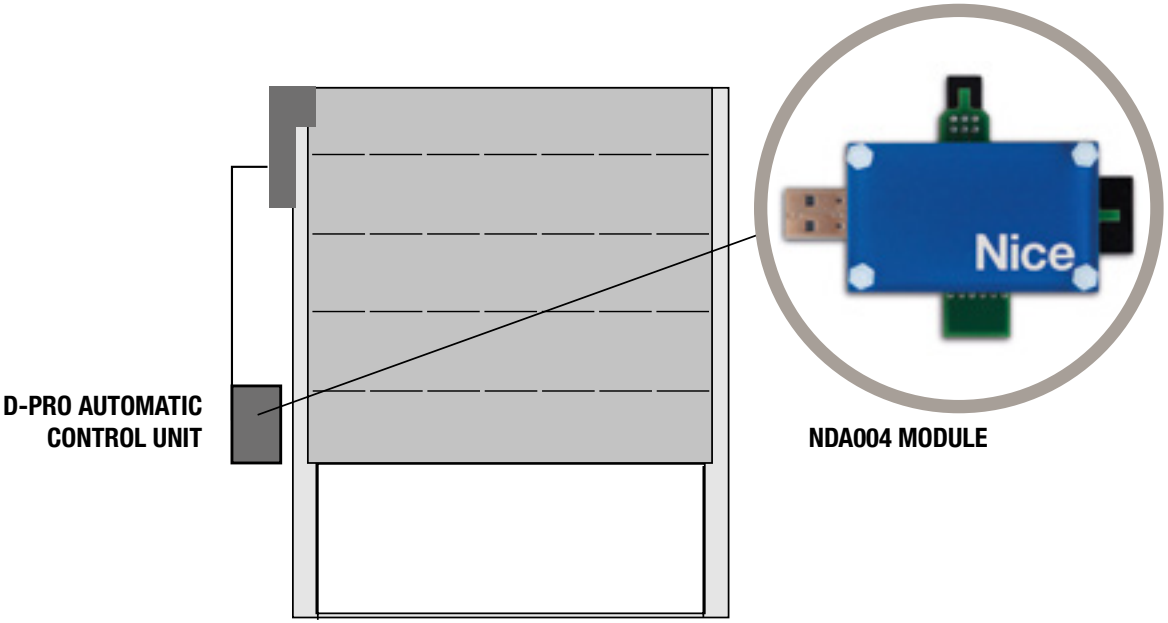

BLUETOOTH CONNECTION

The ideal solution for large installations, such as logistic centres. Everything under control with remote monitoring.

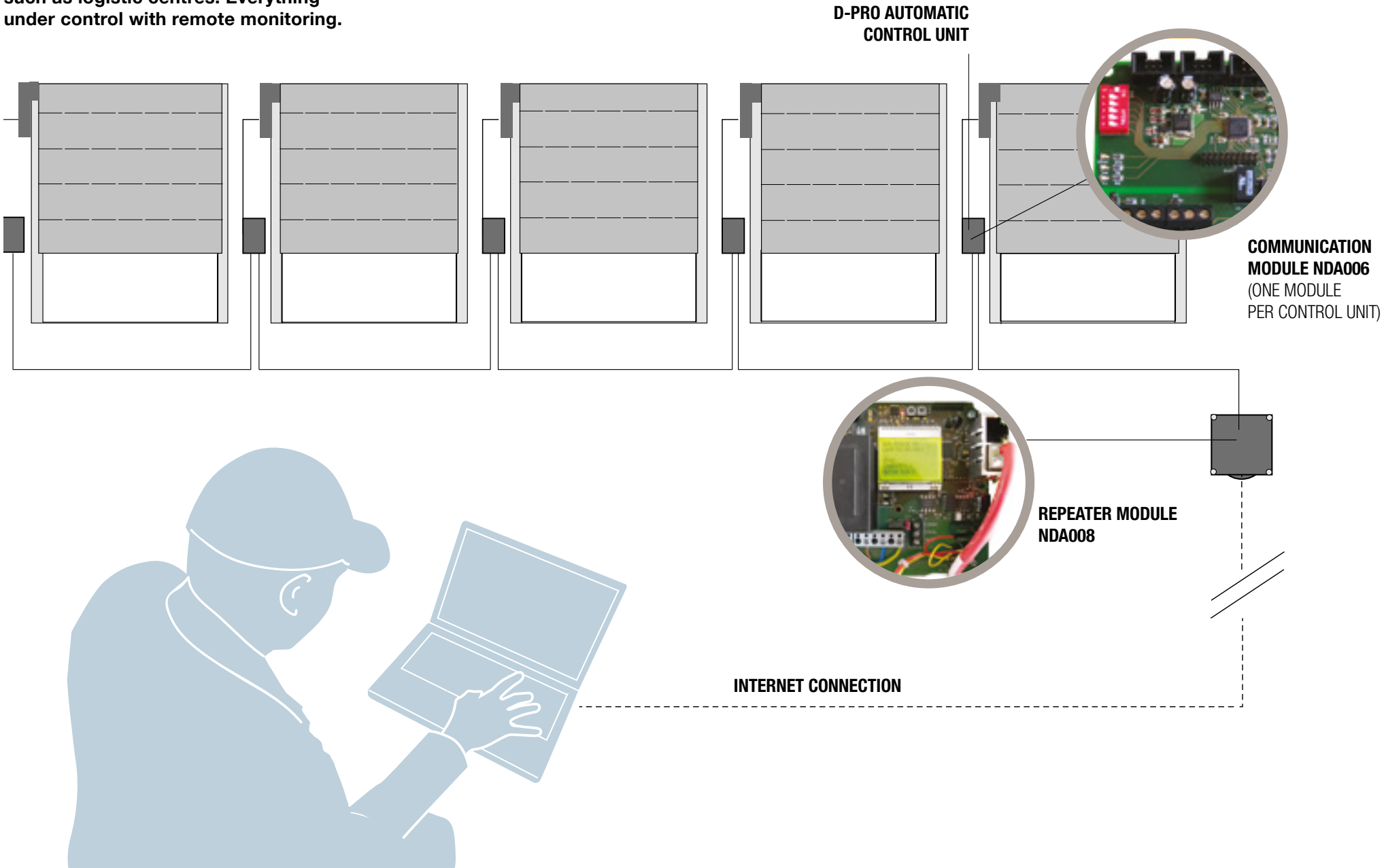

Nice, made-to-measure solutions

Versatile automation systems, easy to install and program.

Take advantage of the Nice gearmotors for industrial automation

- **Cutting-edge gearmotors with advanced technology**
- **Gearmotors for more reliable long-lasting operation**
- **High quality of detail**
- **Convenient and practical solutions**
- **Meets safety requirements**

- **Performance characteristics compliant with european directives and leading internationally recognized standards, including:**

  Directive 2004/108/EC: Electromagnetic Compatibility

  Directive 2006/42/EC: Machinery Directive

  EN 60335-1:2013, EN60335-2-103:2016-05 Safety of electrical products

  TÜV NORD CERT GmbH

SWN/SD/SDN/SDNI

For sectional doors

RDF/RDFI

For rolling shutters

HDFN/HDFNI

For high speed doors

Nice

SWN / SD / SDN / SDNI

For sectional doors

SERIES SWN

SERIES SD

SERIES SDN

SERIES SDNI

Electromechanical gearmotor for sectional doors.
Versions for 230 VAC single-phase and 230/400 VAC three-phase, with new mechanical limit stops or electronic limit switches.

Simple installation:
The gearmotor is installed directly on the shaft of the sectional door. Connection cables equipped with connectors simplify electrical installation.

Sturdy
Gearmotor with bronze gears and permanent lubrication.

Practical
Release available in 3 versions:
- cable release;
- crank emergency;
- chain-operated emergency, the ideal solution for every type of application.

Compact and efficient:
torque up to 140 Nm, speed up to 24 rpm.

Safety:
gearmotors compliant with the most recent European standards and directives in terms of safety and technology.

EMERGENCY OPERATIONS

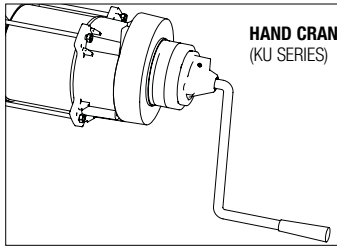

HAND CRANK OPERATION
(KU SERIES)

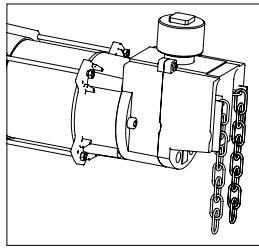

HAND CHAIN OPERATION
(KE SERIES)

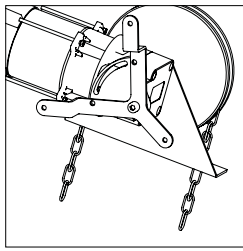

HAND CHAIN OPERATION
(KE2 SERIES)

*Available on request

EMERGENCY RELEASE
(E SERIES)

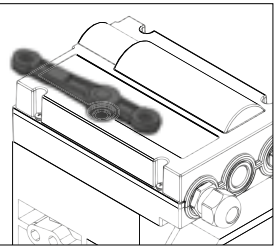

INSTALLATION DIAGRAM

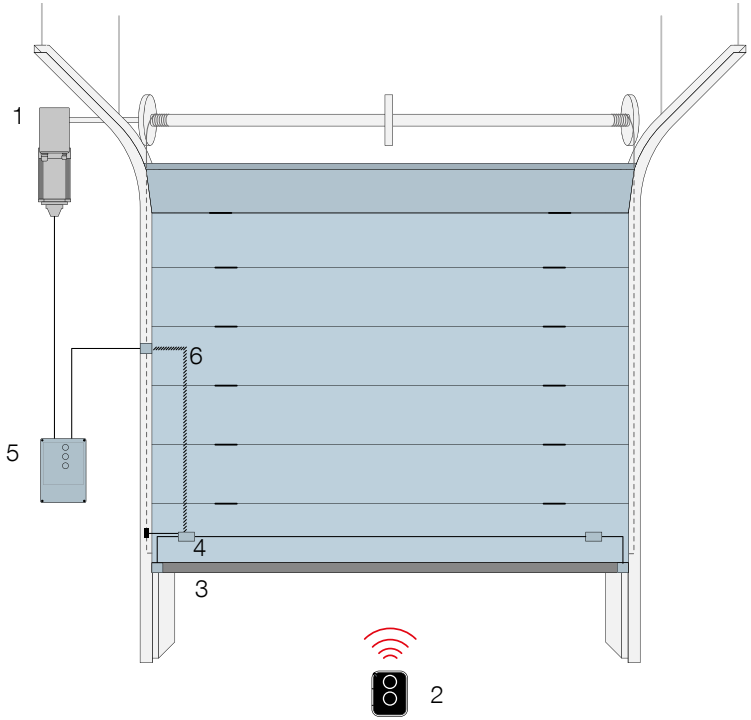

SECTIONAL DOOR
1. SWN/SDN/SDNI gearmotor
2. Transmitter
3. Sensitive edge
4. Connector block
5. Control unit
6. Spiral cable

TECHNICAL SPECIFICATIONS

Model	SWN-70-20	SDN-70-24	SD-100-24	SD-120-20	SD-140-20	SDNI-120-20*
Shaft Ø (mm)	25.4				25.4/31.75	
Max. Torque (Nm)	70		100	120	140	120
Rated torque (Nm)	60		80	100	120	100
Weight lifted** (N)	2500	3000	4000	4500	5500	4500
Output (rpm)	20	24		20		20***
Motor Power (kW)	0.37				0.55	0.90
Limit switch (rpm)	15					
Working voltage (V)	1x230	3x230 / 3x400				1x230
Working frequency (Hz)	50					50****
Rated current (A)	2.3	1.8	3.1	2.6	3.45	9.5
Cycles/hour	5	6	7	5	6	6
Connection cable (n° x mm^2)	4 x 1.5 mm^2 - 6 x 0.75 mm^2 - 2 x 0.75 mm^2					
Operating temperature (°C)	-20 ÷ +40					
Noise dB(A)	<70					
Protection rating (IP)	54					
Weight (kg)	13.2		11.1	11	12	22

*With integrated inverter. **For balanced doors with 1-4 compensating springs with a Ø 160 mm diameter cable winder drum, observe the permitted cable forces, danger warnings and general rules of safety.
***50 Hz Frequency. ****Working frequency adjustable thanks to inverter.

How to choose the ideal motor for sectional doors

Hand crank emergency operation

Power supply
3 x 400 Vac

Encoder limit switch
15 turns

Code	Description	Compatibility				
		5 m cable	7 m cable	11 m cable	D-Pro Action	D-Pro Automatic
SDN 70.24 EL15 KU	SDN 70 Nm 24 rpm Ø 25.4 mm	**CA0174A00**	**CA0175A00**	**CA0176A00**	**NDCC2000**	**NDCC1000**
SD 100.24 EL15 KU	SD 100 Nm 24 rpm Ø 25.4 mm					
SD 120.20 EL15 KU	SD 120 Nm 20 rpm Ø 25.4 mm					
SD 140.20 EL15 KU	SD 140 Nm 20 rpm Ø 25.4 mm					
	SD 140 Nm 20 rpm Ø 31.75 mm					

Mechanical limt switch
15 turns

Code	Description	Compatibility				
		5 m cable	7 m cable	11 m cable	D-Pro Action	D-Pro Automatic
SDN 70.24 ME15 KU	SDN 70 Nm 24 rpm Ø 25.4 mm	**CA0174B00**	**CA0175B00**	**CA0176B00**	**NDCC2000**	**NDCC1000**
SD 100.24 ME15 KU	SD 100 Nm 24 rpm Ø 25.4 mm	**CA0157A00**	**CA0158A00**	**CA0159A00**		
SD 120.20 ME15 KU	SD 120 Nm 20 rpm Ø 25.4 mm					
SD 140.20 ME15 KU	SD 140 Nm 20 rpm Ø 25.4 mm					
	SD 140 Nm 20 rpm Ø 31.75 mm					

Power supply
1 x 230 Vac

Encoder limit switch
15 turns

Code	Description	Compatibility				
		5 m cable	7 m cable	11 m cable	D-Pro Action	D-Pro Automatic
SWN 70.20 EL15 KU	SWN 70 Nm 20 rpm Ø 25.4 mm	**CA0174A00**	**CA0175A00**	**CA0176A00**	**NDCC2200**	**NDCC1200**

Mechanical limt switch
15 turns

Code	Description	Compatibility				
		5 m cable	7 m cable	11 m cable	D-Pro Action	D-Pro Automatic
SWN 70.20 ME15 KU	SWN 70 Nm 20 rpm Ø 25.4 mm	**CA0174B00**	**CA0175B00**	**CA0176B00**	**NDCC2200**	**NDCC1200**

How to choose the ideal motor for sectional doors

Hand chain emergency operation

Power supply
3 x 400 Vac

Encoder limit switch
15 turns

Code	Description	Compatibility				
		5 m cable	7 m cable	11 m cable	D-Pro Action	D-Pro Automatic
SDN 70.24 EL15 KE	SDN 70 Nm 24 rpm Ø 25.4 mm	**CA0174A00**	**CA0175A00**	**CA0176A00**	**NDCC2000**	**NDCC1000**
SD 100.24 EL15 KE	SD 100 Nm 24 rpm Ø 25.4 mm					
SD 120.20 EL15 KE	SD 120 Nm 20 rpm Ø 25.4 mm					
SD 140.20 EL15 KE	SD 140 Nm 20 rpm Ø 25.4 mm					
	SD 140 Nm 20 rpm Ø 31.75 mm					

Mechanical limt switch
15 turns

Code	Description	Compatibility				
		5 m cable	7 m cable	11 m cable	D-Pro Action	D-Pro Automatic
SDN 70.24 ME15 KE	SDN 70 Nm 24 rpm Ø 25.4 mm	**CA0174B00**	**CA0175B00**	**CA0176B00**	**NDCC2000**	**NDCC1000**
SD 100.24 ME15 KE	SD 100 Nm 24 rpm Ø 25.4 mm	**CA0157A00**	**CA0158A00**	**CA0159A00**		
SD 120.20 ME15 KE	SD 120 Nm 20 rpm Ø 25.4 mm					
SD 140.20 ME15 KE	SD 140 Nm 20 rpm Ø 25.4 mm					
	SD 140 Nm 20 rpm Ø 31.75 mm					

Power supply
1 x 230 Vac

Encoder limit switch
15 turns

Code	Description	Compatibility				
		5 m cable	7 m cable	11 m cable	D-Pro Action	D-Pro Automatic
SWN 70.20 EL15 KE	SWN 70 Nm 20 rpm Ø 25.4 mm	**CA0174A00**	**CA0175A00**	**CA0176A00**	**NDCC2200**	**NDCC1200**

Mechanical limt switch
15 turns

Code	Description	Compatibility				
		5 m cable	7 m cable	11 m cable	D-Pro Action	D-Pro Automatic
SWN 70.20 ME15 KE	SWN 70 Nm 20 rpm Ø 25.4 mm	**CA0174B00**	**CA0175B00**	**CA0176B00**	**NDCC2200**	**NDCC1200**

Emergency release

Power supply
3 x 400 Vac

Encoder limit switch
15 turns

Code	Description	Compatibility				
		5 m cable	7 m cable	11 m cable	D-Pro Action	D-Pro Automatic
SDN 70.24 EL15 E	SDN 70 Nm 24 rpm Ø 25.4 mm	**CA0174A00**	**CA0175A00**	**CA0176A00**	**NDCC2000**	**NDCC1000**
SD 100.24 EL15 E	SD 100 Nm 24 rpm Ø 25.4 mm					
SD 120.20 EL15 E	SD 120 Nm 20 rpm Ø 25.4 mm					
SD 140.20 EL15 E	SD 140 Nm 20 rpm Ø 25.4 mm					
	SD 140 Nm 20 rpm Ø 31.75 mm					

Mechanical limt switch
15 turns

Code	Description	Compatibility				
		5 m cable	7 m cable	11 m cable	D-Pro Action	D-Pro Automatic
SD 70.24 ME15 E	SDN 70 Nm 24 rpm Ø 25.4 mm	**CA0174B00**	**CA0175B00**	**CA0176B00**	**NDCC2000**	**NDCC1000**
SD 100.24 ME15 E	SD 100 Nm 24 rpm Ø 25.4 mm	**CA0157A00**	**CA0158A00**	**CA0159A00**		
SD 120.20 ME15 E	SD 120 Nm 20 rpm Ø 25.4 mm					
SD 120.20 ME15 E	SD 140 Nm 20 rpm Ø 25.4 mm					
	SD 140 Nm 20 rpm Ø 31.75 mm					

Power supply
1 x 230 Vac

Encoder limit switch
15 turns

Code	Description	Compatibility				
		5 m cable	7 m cable	11 m cable	D-Pro Action	D-Pro Automatic
SWN 70.20 EL15 E	SWN 70 Nm 20 rpm Ø 25.4 mm	**CA0154A00**	**CA0155A00**	**CA0156A00**	**NDCC2200**	**NDCC1200**

Mechanical limt switch
15 turns

Code	Description	Compatibility				
		5 m cable	7 m cable	11 m cable	D-Pro Action	D-Pro Automatic
SWN 70.20 ME15 E	SWN 70 Nm 20 rpm Ø 25.4 mm	**CA0157A00**	**CA0158A00**	**CA0159A00**	**NDCC2200**	**NDCC1200**

MODEL:

SWN 70 - 20 - KU

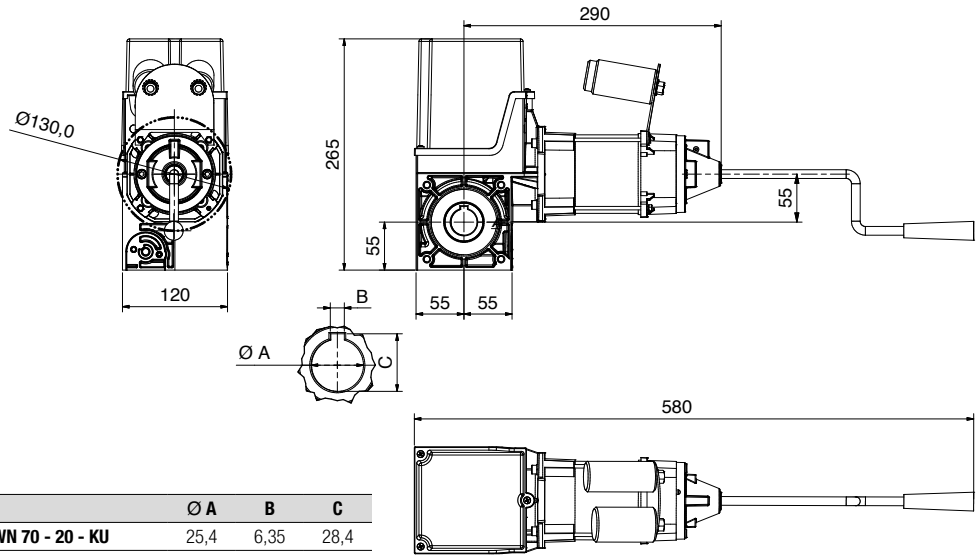

	Ø A	B	C
SWN 70 - 20 - KU	25,4	6,35	28,4

SWN 70 - 20 - E

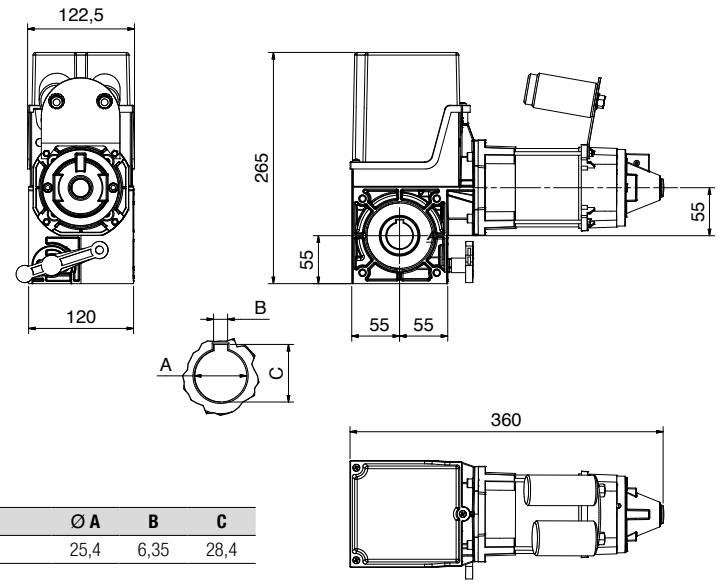

	Ø A	B	C
SWN 70 - 20 - E	25,4	6,35	28,4

SWN 70-20 KE

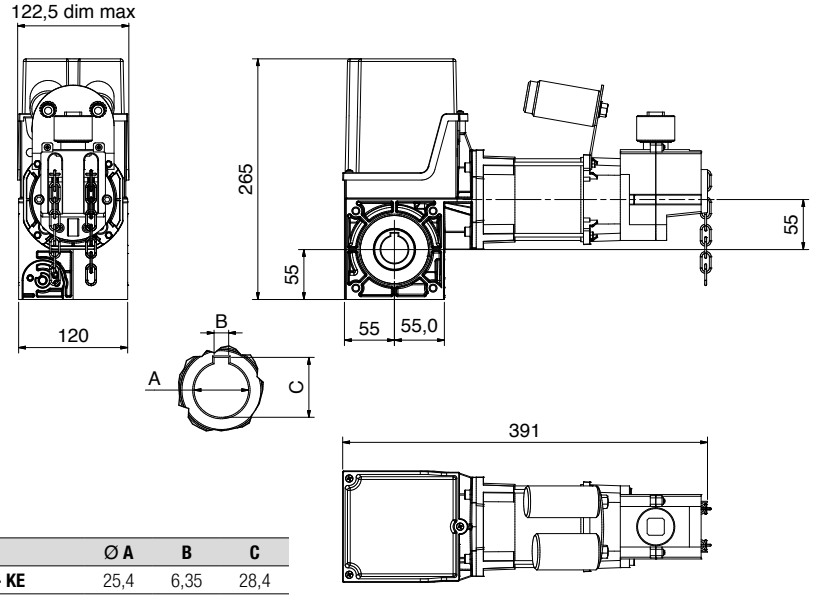

	Ø A	B	C
SWN 70 - 20 - KE	25,4	6,35	28,4

MODEL:

SDN 70-24 KU

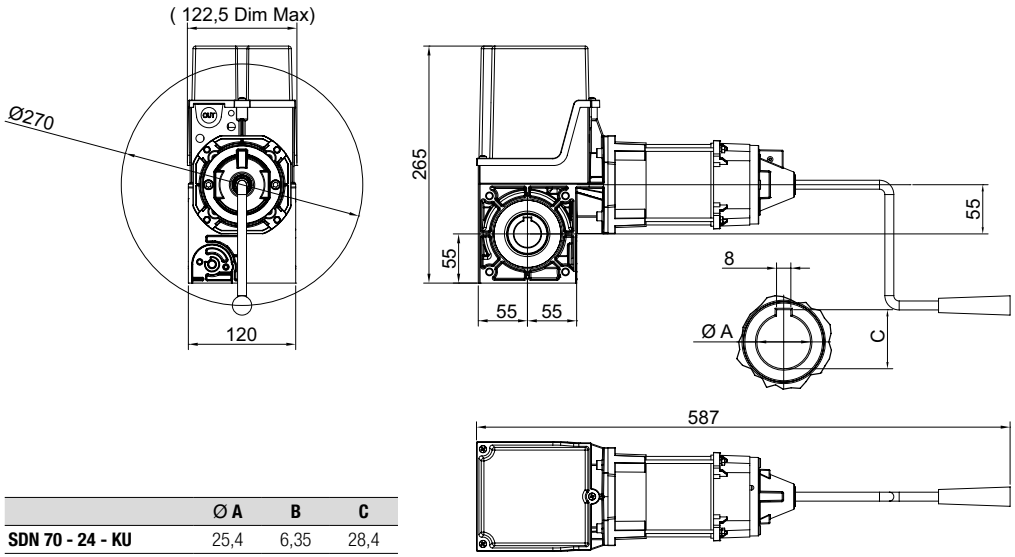

	Ø A	B	C
SDN 70 - 24 - KU	25,4	6,35	28,4

SDN 70 - 24 - E

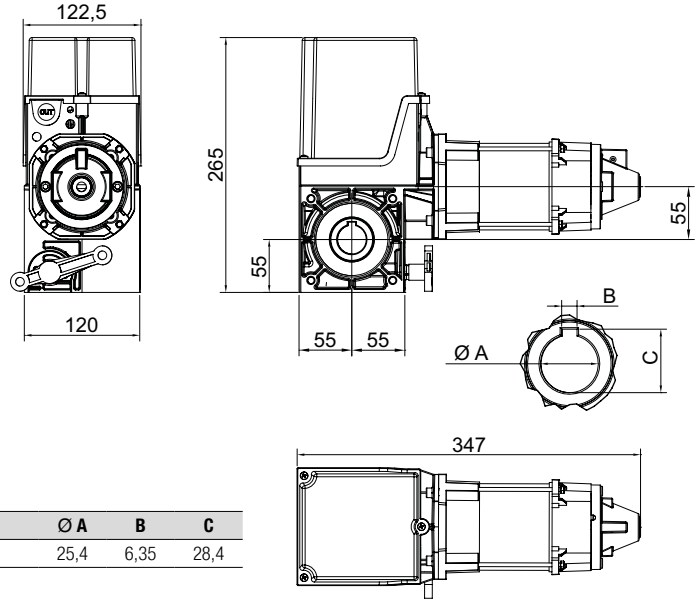

	Ø A	B	C
SDN 70 - 24 - E	25,4	6,35	28,4

SDN 70 - 24 - KE

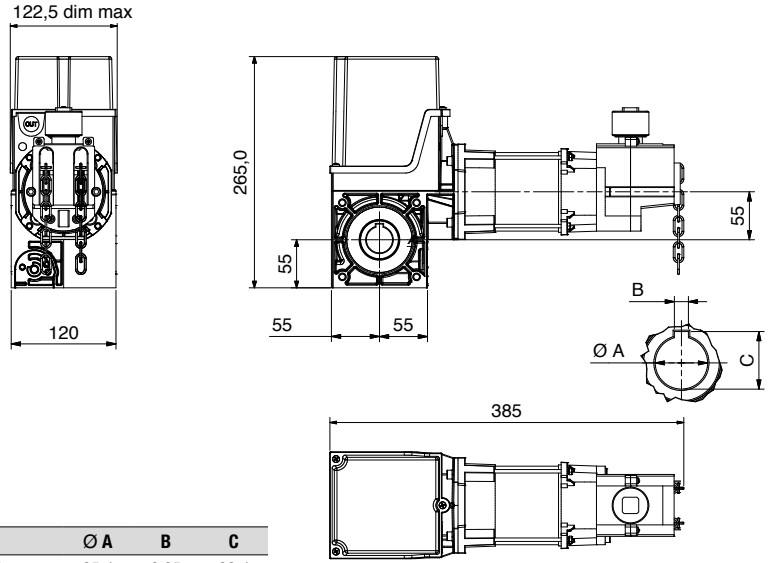

	Ø A	B	C
SDN 70 - 24 - KE	25,4	6,35	28,4

MODEL:

SDNI 140 - 20 - KU

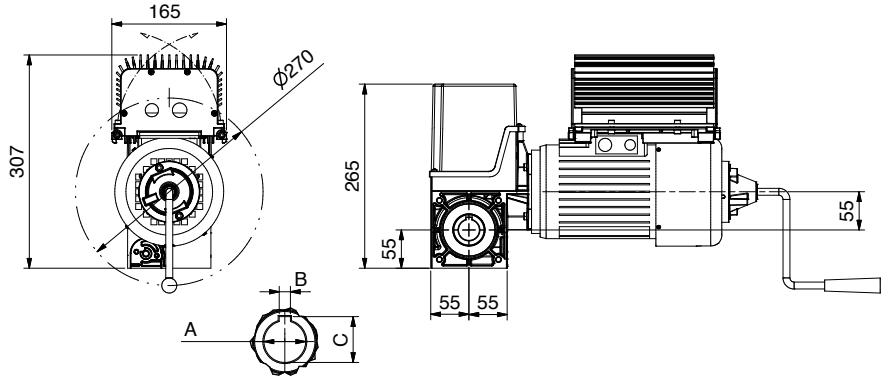

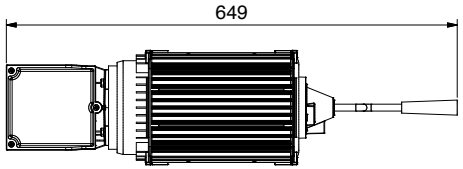

	Ø A	B	C
SDNI 140 - 20 - KU	31,75	6,35	34,7

SD-100-24-E, SD-120-20-E, SD-140-20-E

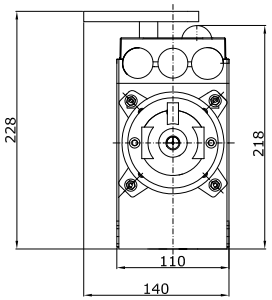

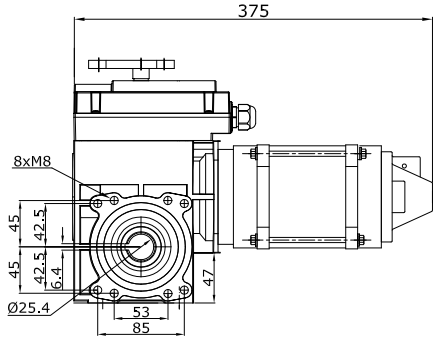

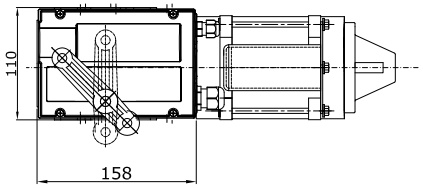

SD-100-24-KU, SD-120-20-KU, SD-140-20-KU

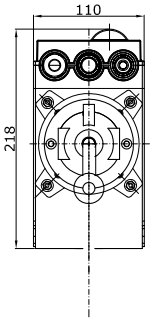

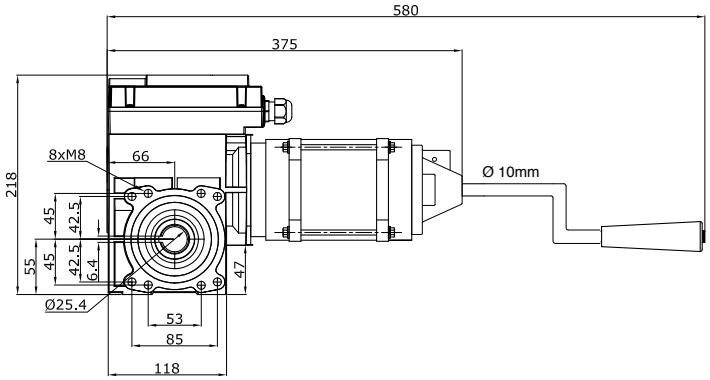

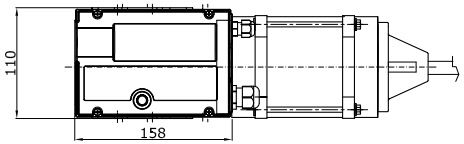

MODEL:

SD-100-24-KE, SD-120-20-KE, SD-140-20-KE

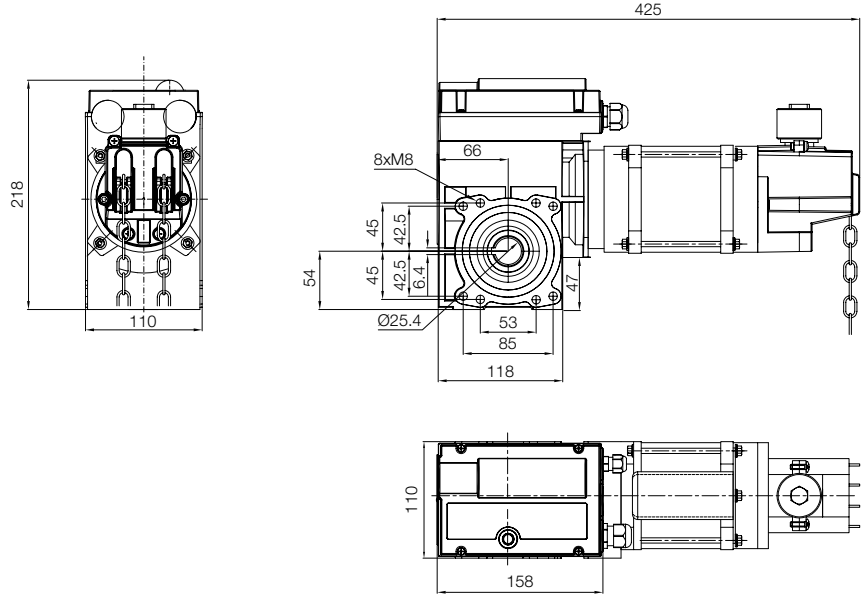

SD-100-24-KE2, SD-120-20-KE2, SD-140-20-KE2

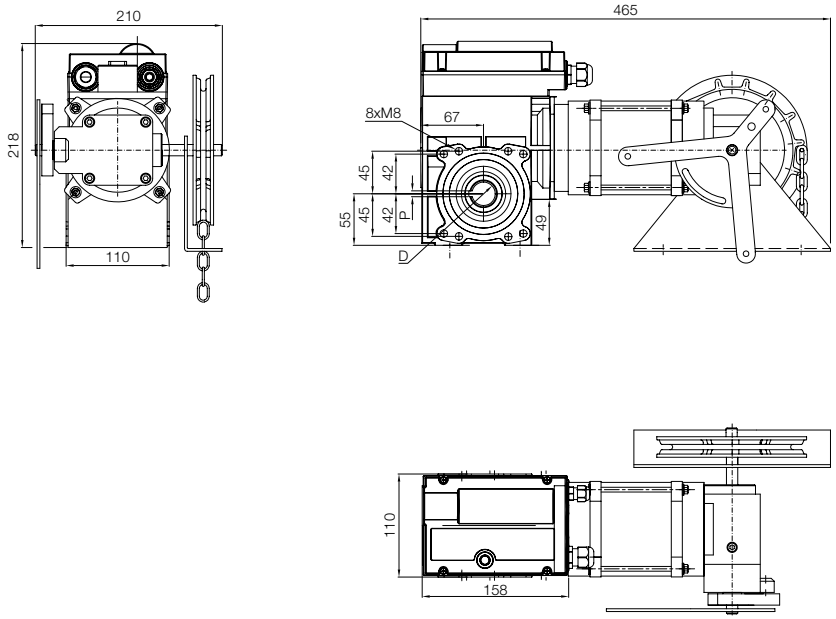

54
56
58
60

Nice

RDF / RDFI

For rolling shutters

RDF SERIES

RDFI SERIES

Electromechanical gearmotor for rolling shutters with integrated brake and mechanical limit stops or electronic limit switches, chain-operated emergency (KE series) or crank emergency (KU series) with integrated anti-fallback device.

Simple installation:
the gearmotor is installed directly on the shaft of the rolling door (Ø 30 mm, Ø 40 mm, Ø 55 mm). Connection cables equipped with connectors simplify electrical installation.

Compact and efficient:
torque up to 1,400 Nm, speed up to 24 rpm.

High safety thanks to the anti-fallback safety system and possibility of connecting safety devices such as optical or resistive sensitive edges (8.2 kΩ). Gearmotors compliant with the most recent European standards and directives in terms of safety and technology.

Practical
Release available in 2 versions:
- crank emergency;
- chain-operated emergency, the ideal solution for every type of application.

More force:
on the RDF series, torque can be increased by means of 1:2 and 1:3 chain reduction kits.

Available on request: special fastening accessories, shafts and discs for welding.

Speed regulation:
RDFI models with integrated inverter allow acceleration, braking and speed to be controlled. Including via smartphone thanks to the Nice Industrial app.

EMERGENCY OPERATIONS

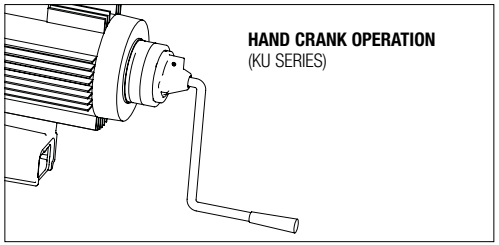

HAND CRANK OPERATION
(KU SERIES)

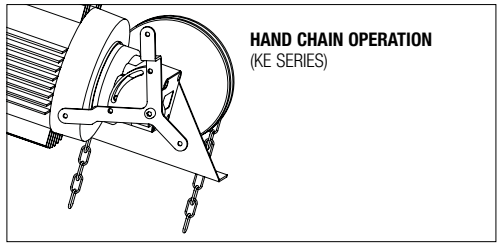

HAND CHAIN OPERATION
(KE SERIES)

INSTALLATION DIAGRAM

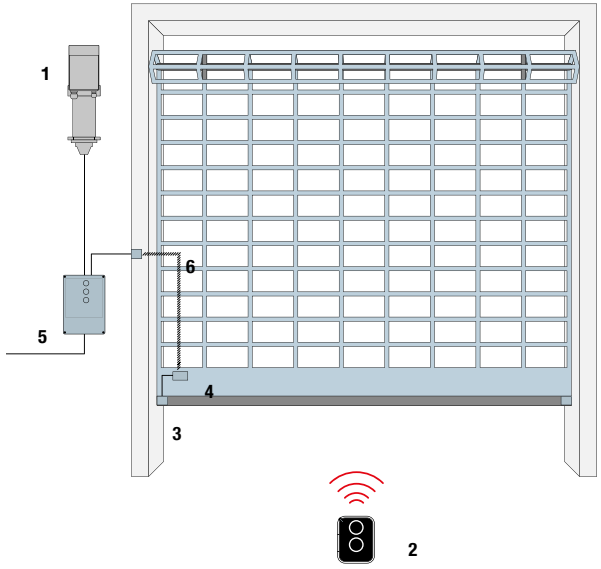

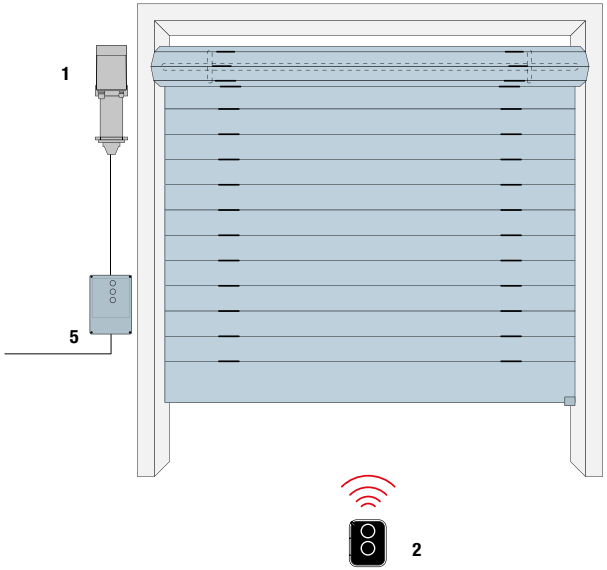

ROLLING SHUTTERS
1. RDF/RDFI gearmotor
2. Transmitter
3. Sensitive edge
4. Connector block
5. Control unit
6. Spiral cable

Gearmotor	Steel pipe EN 10220 (mm)										
RDF series	**101,6 x 3,6**	**108,0 x 3,6**	**133,0 x 4**	**159,0 x 4,5**	**177,8 x 5**	**193,7 x 5,4**	**219,1 x 5,9**	**244,5 x 6,3**	**273,0 x 6,3**	**298,5 x 7,1**	**323,9 x 7,1**
RDF-140-20	125	122	115	106	99	94	85	77	69	64	59
RDF-220-15	208	204	192	177	166	157	142	128	115	106	98
RDF-290-15	260	255	240	221	207	197	177	160	144	133	123
RDF-380-15	375	368	335	319	299	284	255	231	208	192	177
RDF-450-15	416	408	383	354	332	315	284	256	231	213	197
RDF-550-12	468	460	431	399	373	355	319	289	260	240	222
RDF-250-24	239	237	225	211	201	190	176	160	144	133	123
RDF-350-24	335	332	315	296	281	266	247	224	202	186	172
RDF-500-24	479	475	451	423	402	381	352	321	289	266	247
RDF-750-24	677	664	623	576	539	513	461	417	376	346	321
RDF-950-24	885	868	815	753	705	671	603	545	492	453	419
RDF-750-9.5	781	715	671	620	581	552	497	449	405	373	345
RDF-1250-24	1145	1124	1055	975	913	869	781	706	637	586	543
RDF-1400-24	1354	1324	1247	1152	1079	1026	923	835	753	693	642
RDF-850-10	-	-	-	664	622	592	532	481	434	400	370
RDF-1100-10	-	-	-	842	788	750	675	610	550	506	469
RDF-1400-7	-	-	-	1063	1038	987	888	770	724	666	617
RDFI-250-24	191	189	180	168	160	152	140	128	115	106	98
RDFI-350-24	268	265	252	236	224	212	197	179	161	148	137
RDFI-500-24	383	380	360	338	321	304	281	256	231	212	197

The table applies to section bars with a single wall only (thickness 20 mm). The dimensions must be taken into account for winding if section bars with double wall or greater thickness or height are used.

In this case higher torque applies after 1-2 turns. A 20% friction loss is considered for the normal rolling shutters in the table.

t is generally advisable to check the door proportions when there are coverings, section bars with double wall or doors higher than normal, or in the case of particular entry situations that could require other force ratios or cause additional friction losses (e.g. doors that are wider than the height), for example.

TECHNICAL SPECIFICATIONS RDF SERIES

Model	RDF-140-20	RDF-220-15	RDF-290-15	RDF-380-15	RDF-450-15	RDF-550-12	RDF-750-9,5	RDF-850-10	RDF-1100-10	RDF-1400-7	RDF-250-24	RDF-350-24	RDF-500-24	RDF-750-24	RDF-950-24	RDF-1250-24	RDF-1400-24
Shaft Ø (mm)	30			40				55			40			55			
Max. torque (Nm)	140	220	290	380	450	550	750	850	1100	1400	250	350	500	750	950	1250	1400
Rated torque (Nm)	120	200	250	360	400	450	700	700	950	1250	230	310	450	650	850	1100	1250
Output rpm	20	15	15	15	15	12	9,5	10	10	7	24	24	24	24	24	24	24
Motor power (kW)	0,55	1,1	1,1	1,5	1,5	1,5	1,5	2,2	2,2	2,2	1,1	1,5	2,2	2,2	3	4	5,5
Limit switch rpm	15	10-20	10-20	10-20	10-20	10	40	10-40	10-40	10-40	10-40	10-40	10-40	10-40	10-40	10-40	10-40
Working voltage (V/Hz)	3x230 V / 3x400 V 50 Hz																
Duty Cycle	S 3 - 60%																
Connection cable (no. x mm^2)	5 x 1,5																
Operating temperature (°C)	-20 ÷ +40																
Noise dB(A)	<70																
Protection rating (IP)	IP 54																
Weight (kg)	12,4	22	24	28,9	27,7	27,7	35	51,7	51,9	58	24,1	29,2	32,7	51,9	61	63	65

Gearmotors with integrated anti-fallback device, independent of speed and position.

TECHNICAL SPECIFICATIONS RDFI SERIES

Model	RDFI-250-24	RDFI-350-24	RDFI-500-24
Shaft Ø (mm)	30	40	40
Max. Torque (Nm)	250	350	500
Rated Torque (Nm)	230	300	450
Output (rpm)	24	24	24
Motor Power (kW)	1,1	1,5	2,2
Limit Switch Range	40	40	40
Power Supply (V)	1x230		
Working frequency (Hz)	50		
Rated current (A)	10	11,5	15,8
Cycles/hour	7	8	7
Connection cable (n° x mm^2)	4 x 1,5 mm^2 - 6 x 0,75 mm^2 - 2 x 0,75 mm^2		
Operating temperature (°C)	-20 ÷ +40		
Noise dB(A)	<70		
Protection rating (IP)	54		
Weight (kg)	24	31	

How to choose the ideal motor for rolling shutters

Hand crank emergency operation, power supply 3 x 400 Vac

Encoder limit switch

		Compatibility				
Code	**Description**	**5 m cable**	**7 m cable**	**11 m cable**	**D-Pro Action**	**D-Pro Automatic**
RDF 140.20 EL15 KU	RDF 140 Nm 20 rpm Ø 30 mm	**CA0174A00**	**CA0175A00**	**CA0176A00**	**NDCC2000**	**NDCC1000**
RDF 220.15 EL20 KU	RDF 220 Nm 15 rpm Ø 30 mm	**CA0177A00**	**CA0178A00**	**CA0179A00**		
RDF 290.15 EL20 KU	RDF 290 Nm 15 rpm Ø 30 mm					
RDF 380.15 EL20 KU	RDF 380 Nm 15 rpm Ø 40 mm					
RDF 450.15 EL20 KU	RDF 450 Nm 15 rpm Ø 40 mm					
RDF 550.12 EL20 KU	RDF 550 Nm 12 rpm Ø 40 mm					
RDF 750.9,5 EL40 KU	RDF 750 Nm 9.5 rpm Ø 40 mm with brake				**NDCC2100**	
RDF 850.10 EL10 KU	RDF 850 Nm 10 rpm Ø 55 mm with brake					
RDF 1100.10 EL10 KU	RDF 1100 Nm 10 rpm Ø 55 with brake					
RDF 1400.7 EL10 KU	RDF 1400 Nm 7 rpm Ø 55 with brake					

Mechanical limt switch

		Compatibility				
Code	**Description**	**5 m cable**	**7 m cable**	**11 m cable**	**D-Pro Action**	**D-Pro Automatic**
RDF 140.20 ME15 KU	RDF 140 Nm 20 rpm Ø 30 mm	**CA0174B00**	**CA0175B00**	**CA0176B00**	**NDCC2000**	**NDCC1000**
RDF 220.15 ME20 KU	RDF 220 Nm 15 rpm Ø 30 mm	**CA0177B00**	**CA0178B00**	**CA0179B00**		
RDF 290.15 ME20 KU	RDF 290 Nm 15 rpm Ø 30 mm					
RDF 380.15 ME20 KU	RDF 380 Nm 15 rpm Ø 40 mm					
RDF 450.15 ME20 KU	RDF 450 Nm 15 rpm Ø 40 mm					
RDF 550.12 ME20 KU	RDF 550 Nm 12 rpm Ø 40 mm					
RDF 750.9,5 ME40 KU	RDF 750 Nm 9.5 rpm Ø 40 mm with brake				**NDCC2100**	
RDF 850.10 ME10 KU	RDF 850 Nm 10 rpm Ø 55 mm with brake					
RDF 1100.10 ME10 KU	RDF 1100 Nm 10 rpm Ø 55 with brake					
RDF 1400.7 ME10 KU	RDF 1400 Nm 7 rpm Ø 55 with brake					

Hand chain emergency operation, power supply 3 x 400 Vac

Encoder limit switch

		Compatibility				
Code	**Description**	**5 m cable**	**7 m cable**	**11 m cable**	**D-Pro Action**	**D-Pro Automatic**
RDF 140.20 EL15 KE	RDF 140 Nm 20 rpm Ø 30 mm	**CA0174A00**	**CA0175A00**	**CA0176A00**	**NDCC2000**	**NDCC1000**
RDF 220.15 EL20 KE	RDF 220 Nm 15 rpm Ø 30 mm	**CA0177A00**	**CA0178A00**	**CA0179A00**		
RDF 290.15 EL20 KE	RDF 290 Nm 15 rpm Ø 30 mm					
RDF 380.15 EL20 KE	RDF 380 Nm 15 rpm Ø 40 mm					
RDF 450.15 EL20 KE	RDF 450 Nm 15 rpm Ø 40 mm					
RDF 550.15 EL20 KE	RDF 550 Nm 15 rpm Ø 40 mm					
RDF 750.9,5 EL40 KE	RDF 750 Nm 9,5 rpm Ø 40 mm with brake				**NDCC2100**	
RDF 850.15 EL10 KE	RDF 850 Nm 10 rpm Ø 55 mm with brake					
RDF 1100.10 EL10 KE	RDF 1100 Nm 10 rpm Ø 55 with brake					
RDF 1400.7 EL10 KE	RDF 1400 Nm 7 rpm Ø 55 with brake					

Mechanical limt switch

		Compatibility				
Code	**Description**	**5 m cable**	**7 m cable**	**11 m cable**	**D-Pro Action**	**D-Pro Automatic**
RDF 140.20 ME15 KE	RDF 140 Nm 20 rpm Ø 30 mm	**CA0174B00**	**CA0175B00**	**CA0176B00**	**NDCC2000**	**NDCC1000**
RDF 220.15 ME20 KE	RDF 220 Nm 15 rpm Ø 30 mm	**CA0177B00**	**CA0178B00**	**CA0179B00**		
RDF 290.15 ME20 KE	RDF 290 Nm 15 rpm Ø 30 mm					
RDF 380.15 ME20 KE	RDF 380 Nm 15 rpm Ø 40 mm					
RDF 450.15 ME20 KE	RDF 450 Nm 15 rpm Ø 40 mm					
RDF 550.15 ME20 KE	RDF 550 Nm 15 rpm Ø 40 mm					
RDF 750.9,5 ME40 KE	RDF 750 Nm 95 rpm Ø 40 mm with brake				**NDCC2100**	
RDF 850.10 ME10 KE	RDF 850 Nm 10 rpm Ø 55 mm with brake					
RDF 1100.10 ME10 KE	RDF 1100 Nm 10 rpm Ø 55 with brake					
RDF 1400.7 ME10 KE	RDF 1400 Nm 7 rpm Ø 55 with brake					

Hand chain emergency operation, with built-in inverter, power supply 1 x 230 Vac

Encoder limit switch
40 turns

		Compatibility				
Code	**Description**	**5 m cable**	**7 m cable**	**11 m cable**	**D-Pro Action**	**D-Pro Automatic**
RDFI 250.24 EL40 KE	RDFI 250 Nm 24 rpm Ø 40 mm with brake	**-**	**INCLUDED**	**-**	**NO COMPATIBLE**	**NDCC1100**
RDFI 350.24 EL40 KE	RDFI 350 Nm 24 rpm Ø 40 mm with brake					
RDFI 350.24 EL40 KE	RDFI 500 Nm 24 rpm Ø 40 mm with brake					

How to choose the ideal motor for rolling shutters with chain reduction system

Hand crank emergency operation

Power supply
3 x 400 Vac

Encoder limit switch

Code	Description	Compatibility				
		5 m cable	7 m cable	11 m cable	D-Pro Action	D-Pro Automatic
RDF 140.20 EL20 KU	RDF 140 Nm 20 rpm Ø 30 mm	**CA0174A00**	**CA0175A00**	**CA0176A00**	**NDCC2000**	**NDCC1000**
RDF 250.24 EL40 KU	RDF 250 Nm 24 rpm Ø 40 mm with brake	**CA0177A00**	**CA0178A00**	**CA0179A00**	**NDCC2100**	
RDF 350.24 EL40 KU	RDF 350 Nm 24 rpm Ø 40 mm with brake					
RDF 500.24 EL40 KU	RDF 500 Nm 24 rpm Ø 40 mm with brake					
RDF 750.24 EL40 KU	RDF 750 Nm 24 rpm Ø 55 mm with brake					
RDF 950.24 EL40 KU	RDF 950 Nm 24 rpm Ø 55 mm with brake					
RDF 1250.24 EL40 KU	RDF 1250 Nm 24 rpm Ø 55 mm with brake					
RDF 1400.24 EL40 KU	RDF 1400 Nm 24 rpm Ø 55 with brake					

Mechanical limt switch

Code	Description	Compatibility				
		5 m cable	7 m cable	11 m cable	D-Pro Action	D-Pro Automatic
RDF 140.20 ME20 KU	RDF 140 Nm 20 rpm Ø 30 mm	**CA0174B00**	**CA0175B00**	**CA0176B00**	**NDCC2000**	**NDCC1000**
RDF 250.24 ME40 KU	RDF 250 Nm 24 rpm Ø 40 mm with brake	**CA0177B00**	**CA0178B00**	**CA0179B00**	**NDCC2100**	
RDF 350.24 ME40 KU	RDF 350 Nm 24 rpm Ø 40 mm with brake					
RDF 500.24 ME40 KU	RDF 500 Nm 24 rpm Ø 40 mm with brake					
RDF 750.24 ME40 KU	RDF 750 Nm 24 rpm Ø 55 mm with brake					
RDF 950.24 ME40 KU	RDF 950 Nm 24 rpm Ø 55 mm with brake					
RDF 1250.24 ME40 KU	RDF 1250 Nm 24 rpm Ø 55 mm with brake					
RDF 1400.24 ME40 KU	RDF 1400 Nm 24 rpm Ø 55 with brake					

Hand chain emergency operation

Power supply
3 x 400 Vac

Encoder limit switch

Code	Description	Compatibility				
		5 m cable	7 m cable	11 m cable	D-Pro Action	D-Pro Automatic
RDF 140.20 EL20 KE	RDF 140 Nm 20 rpm Ø 30 mm	**CA0174A00**	**CA0175A00**	**CA0176A00**	**NDCC2000**	**NDCC1000**
RDF 250.24 EL40 KE	RDF 250 Nm 24 rpm Ø 40 mm with brake	**CA0177A00**	**CA0178A00**	**CA0179A00**	**NDCC2100**	
RDF 350.24 EL40 KE	RDF 350 Nm 24 rpm Ø 40 mm with brake					
RDF 500.24 EL40 KE	RDF 500 Nm 24 rpm Ø 40 mm with brake					
RDF 750.24 EL40 KE	RDF 750 Nm 24 rpm Ø 55 mm with brake					
RDF 950.24 EL40 KE	RDF 950 Nm 24 rpm Ø 55 mm with brake					
RDF 1250.24 EL40 KE	RDF 1250 Nm 24 rpm Ø 55 mm with brake					
RDF 1400.24 EL40 KE	RDF 1400 Nm 24 rpm Ø 55 with brake					

Mechanical limt switch

Code	Description	Compatibility				
		5 m cable	7 m cable	11 m cable	D-Pro Action	D-Pro Automatic
RDF 140.20 ME20 KE	RDF 140 Nm 20 rpm Ø 30 mm	**CA0174B00**	**CA0175B00**	**CA0176B00**	**NDCC2000**	**NDCC1000**
RDF 250.24 ME40 KE	RDF 250 Nm 24 rpm Ø 40 mm with brake	**CA0177B00**	**CA0178B00**	**CA0179B00**	**NDCC2100**	
RDF 350.24 ME40 KE	RDF 350 Nm 24 rpm Ø 40 mm with brake					
RDF 500.24 ME40 KE	RDF 500 Nm 24 rpm Ø 40 mm with brake					
RDF 750.24 ME40 KE	RDF 750 Nm 24 rpm Ø 55 mm with brake					
RDF 950.24 ME40 KE	RDF 950 Nm 24 rpm Ø 55 mm with brake					
RDF 1250.24 ME40 KE	RDF 1250 Nm 24 rpm Ø 55 mm with brake					
RDF 1400.24 ME40 KE	RDF 1400 Nm 24 rpm Ø 55 with brake					

MODEL:

RDF-140-20-KU

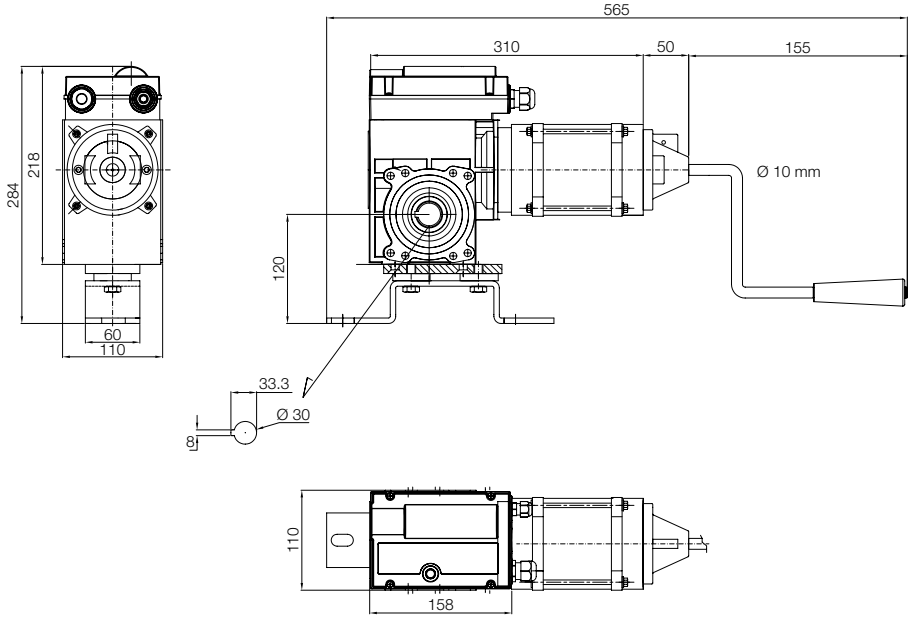

RDF-220/290-15-KU

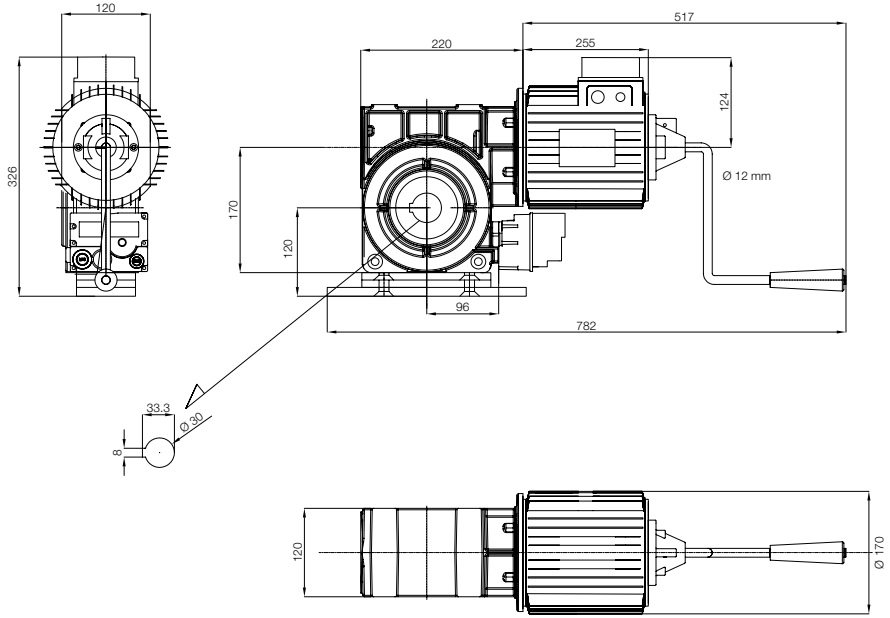

RDF-140-20-KE2

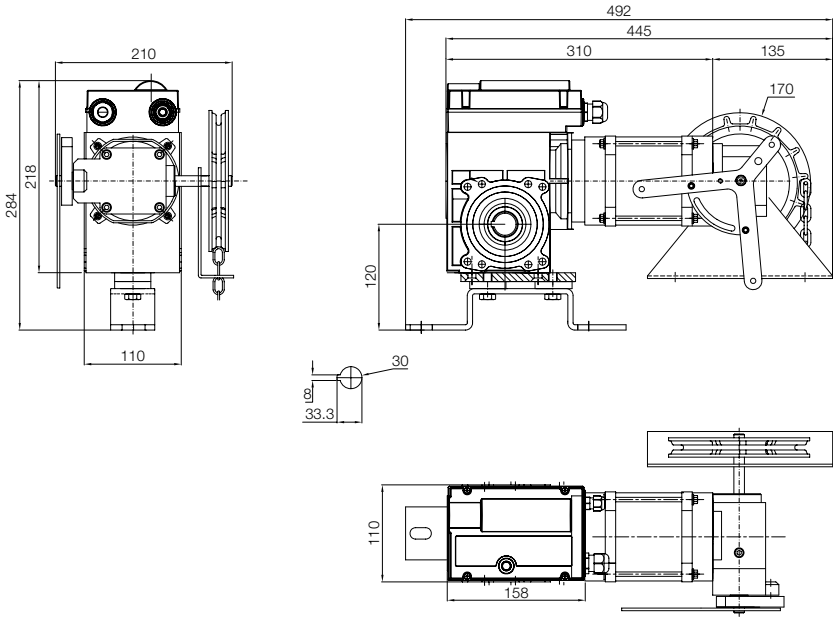

RDF-220/290-15-KE2

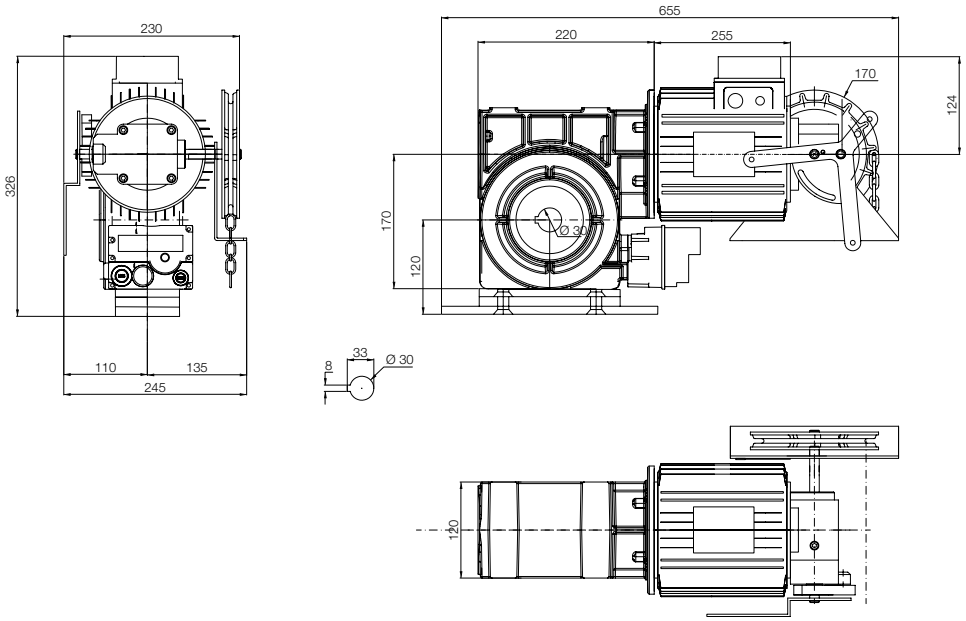

MODEL:

RDF-380/450-15-KU

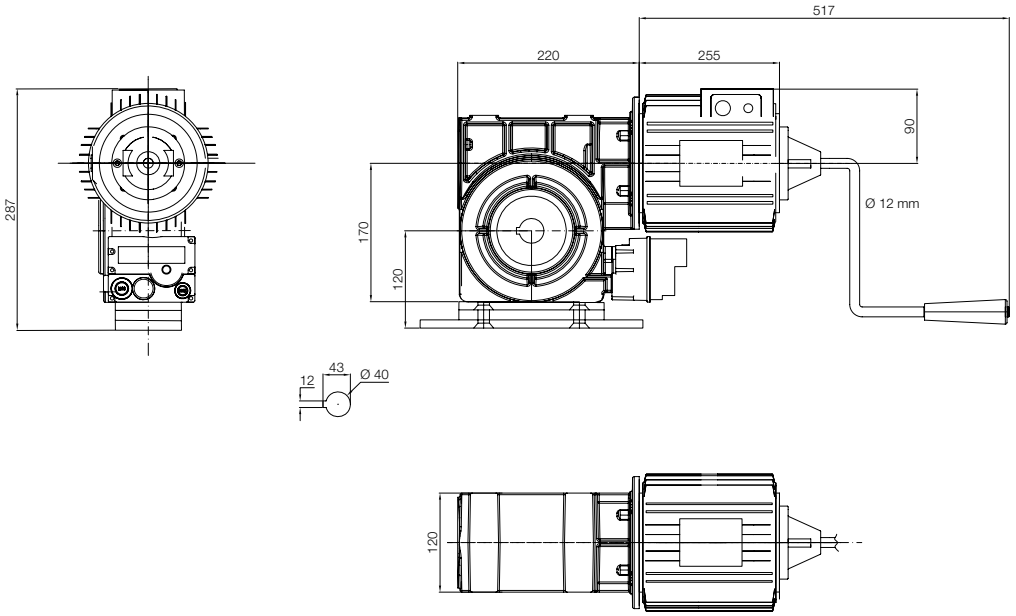

RDF-550-12-KU

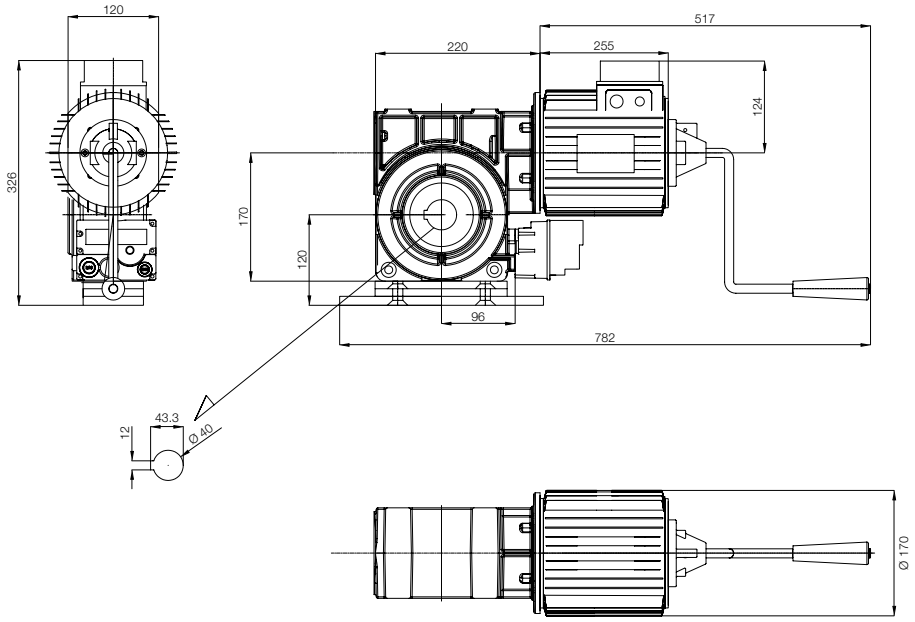

RDF-380/450-15-KE2

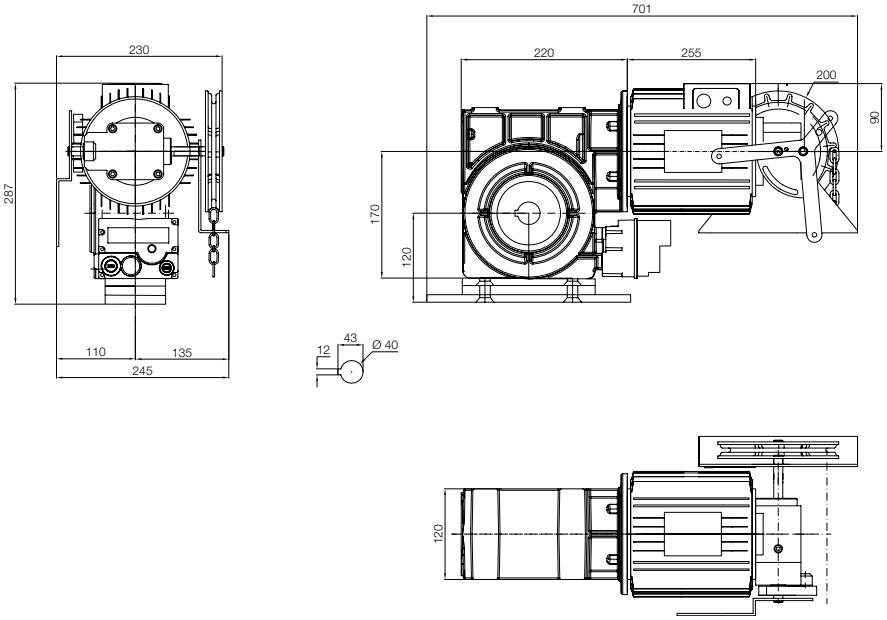

RDF-550-12-KE2

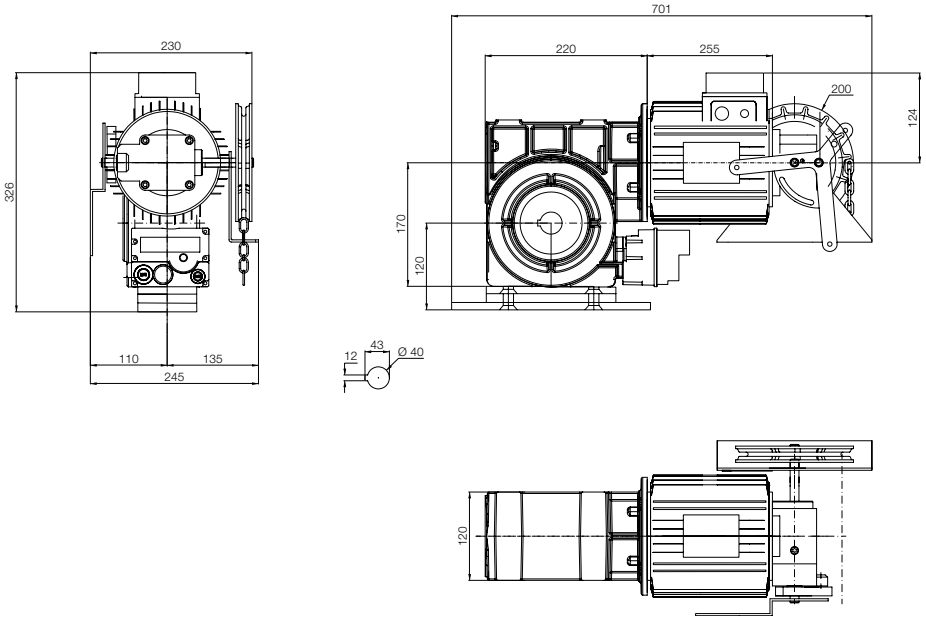

MODEL:

RDF-750-9,5-KU

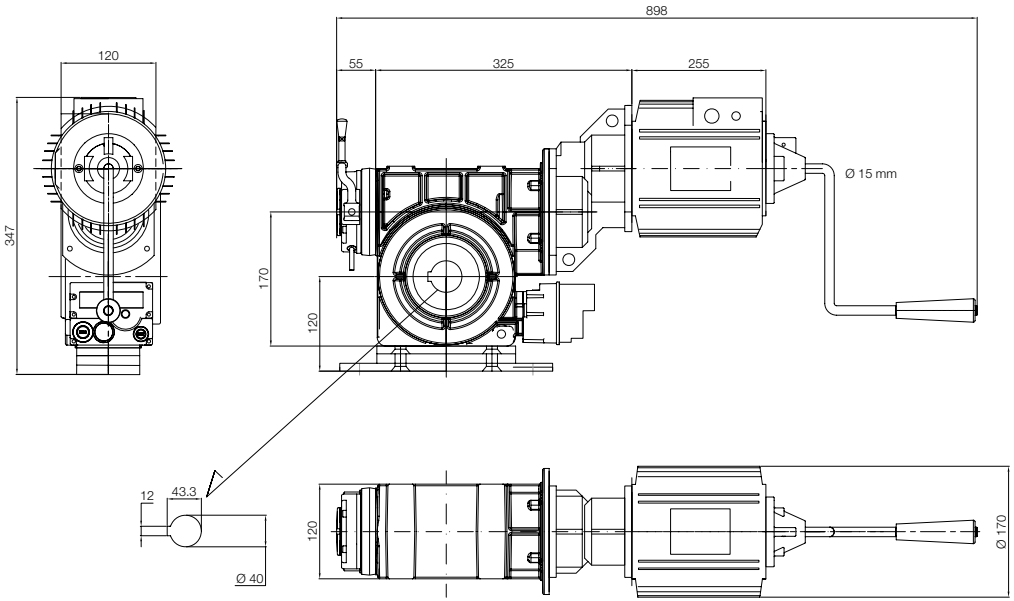

RDF-850/1100-10-KU

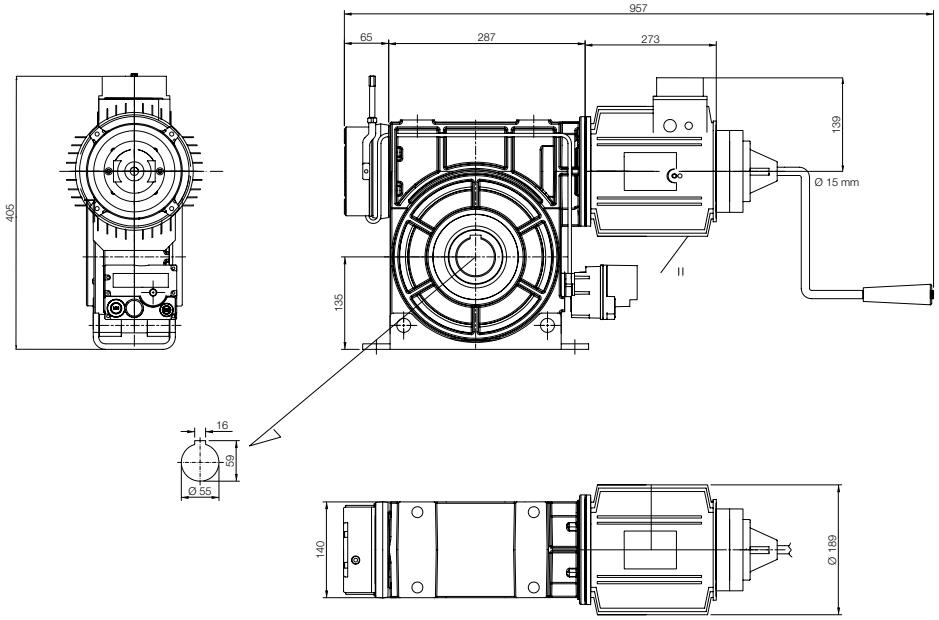

RDF-750-9,5-KE2

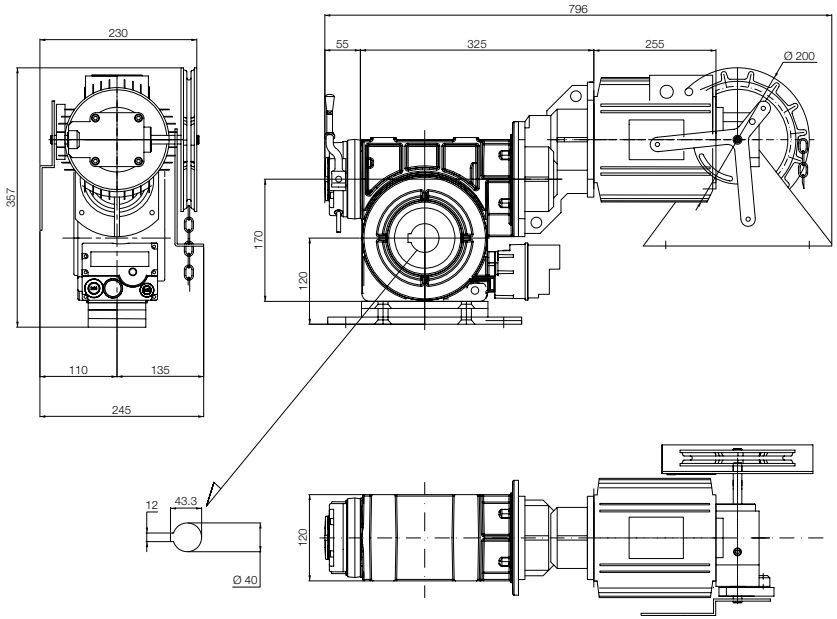

RDF-850/1100-10-KE2

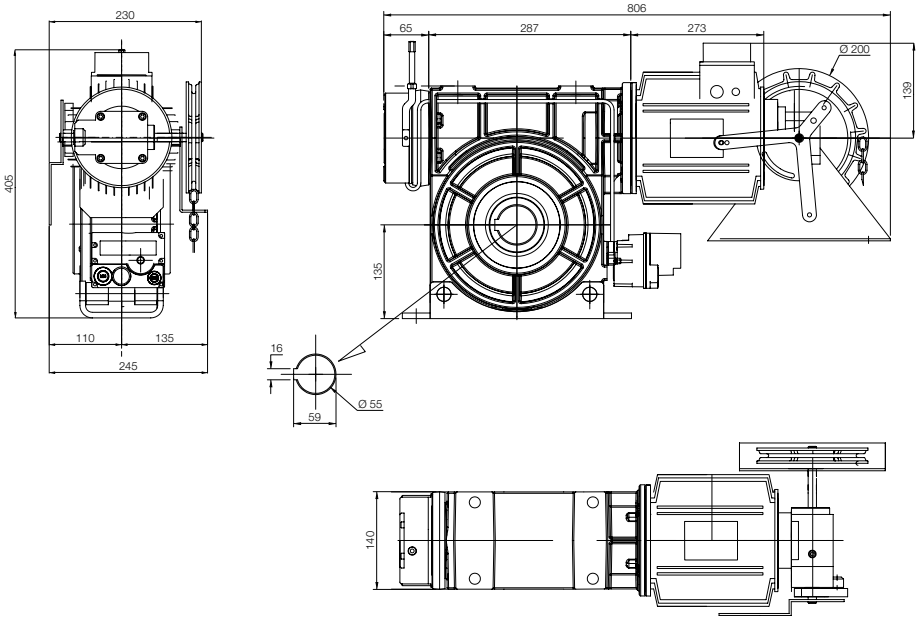

MODEL:

RDF-1400-7-KU

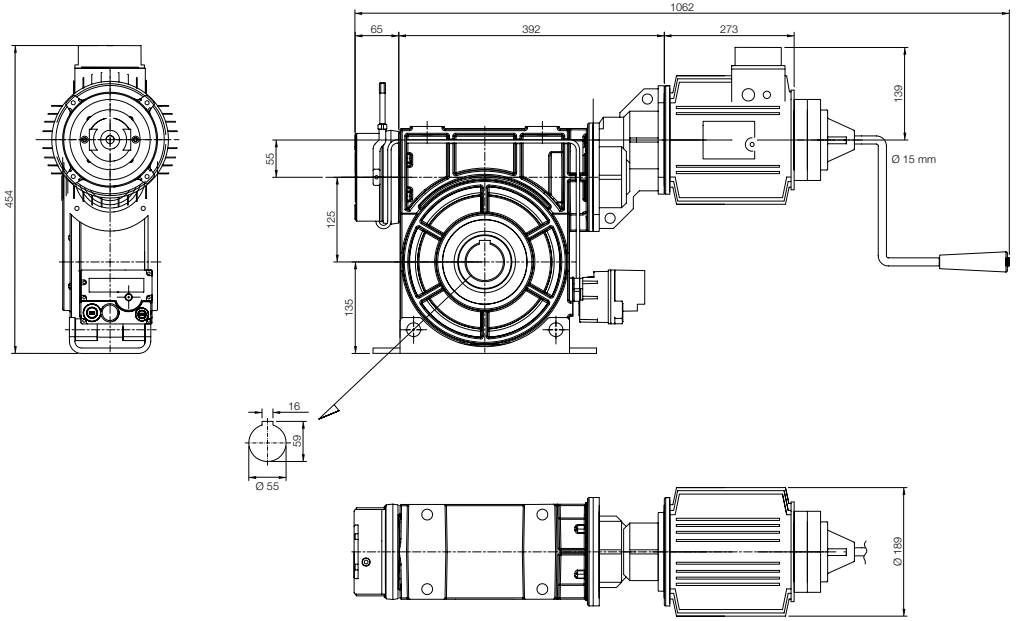

RDF-250-24-KU

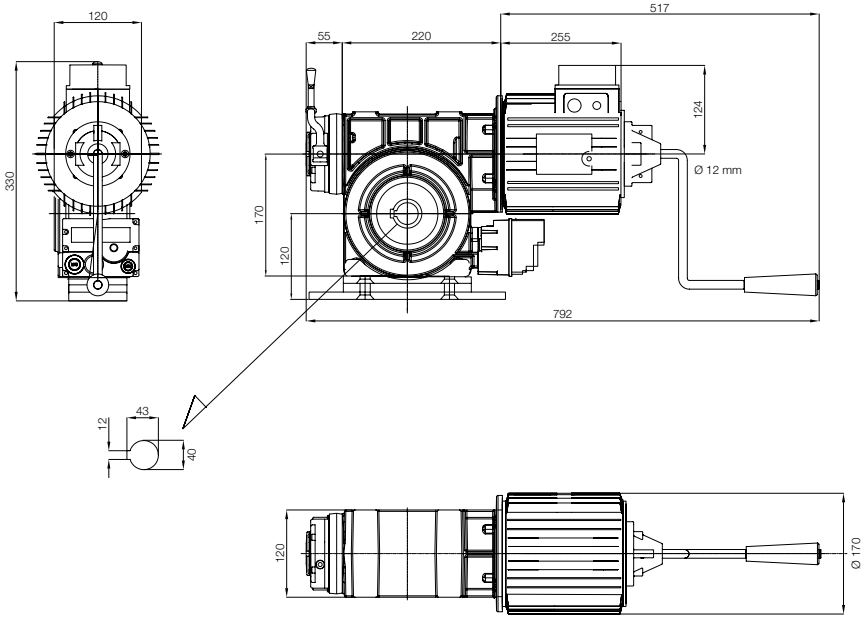

RDF-1400-7-KE2

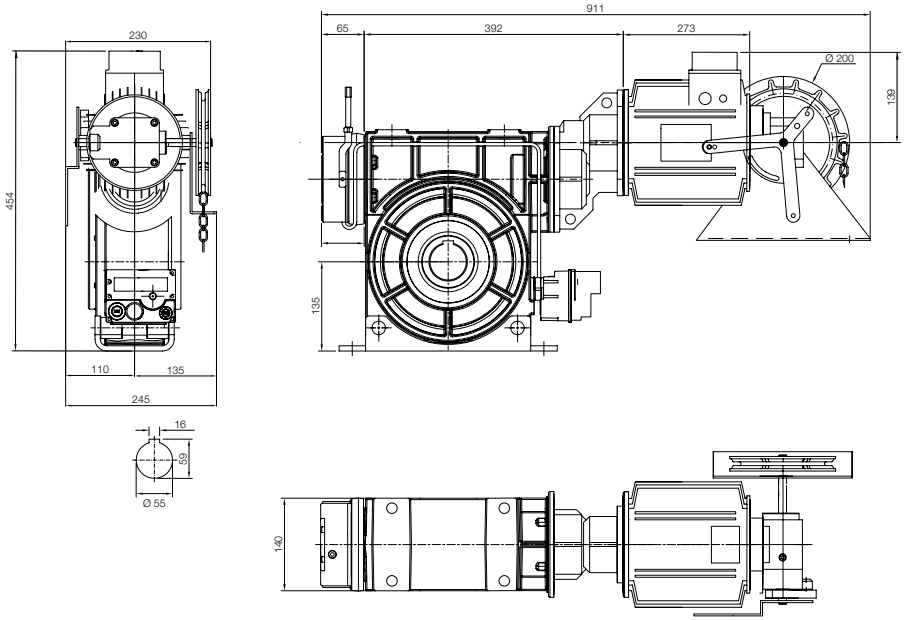

RDF-250-24-KE2

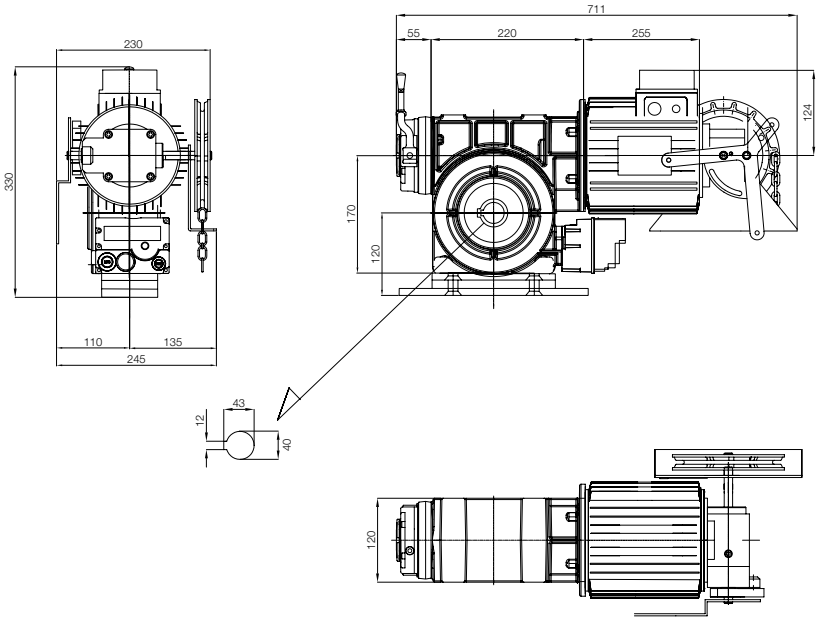

MODEL:

RDF-350-24-KU

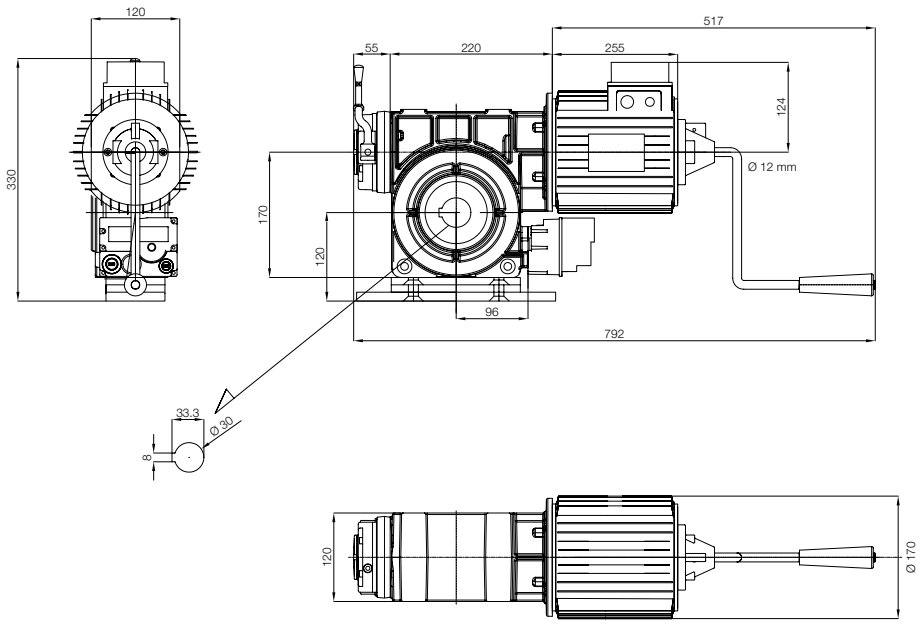

RDF-500-24-KU

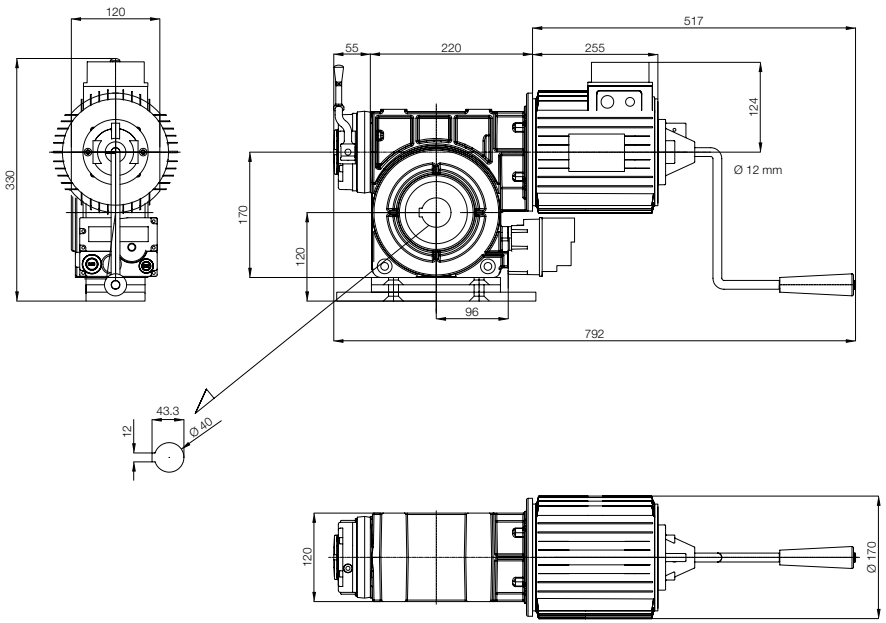

RDF-350-24-KE2

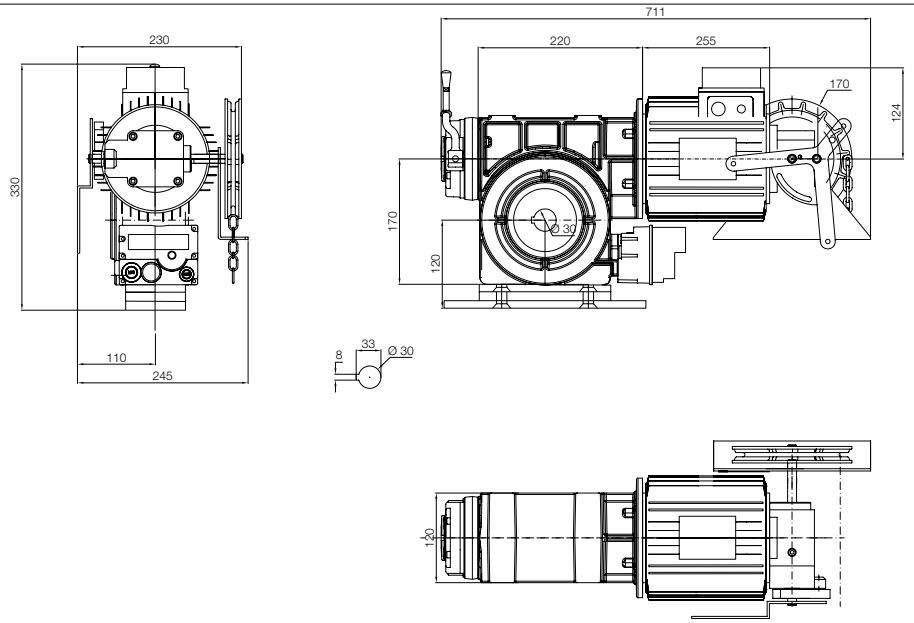

RDF-500-24-KE2

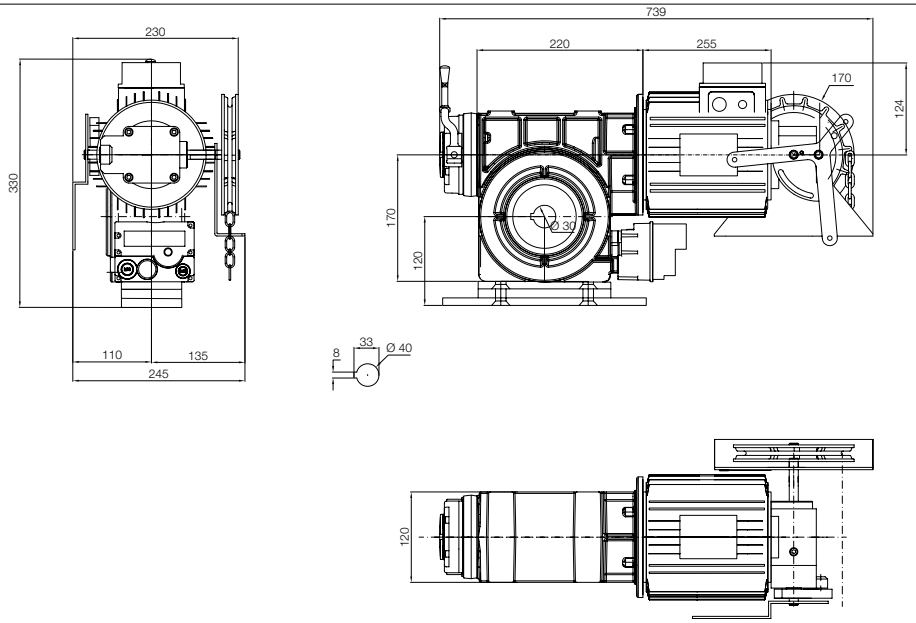

MODEL:

RDF-750-24-KU

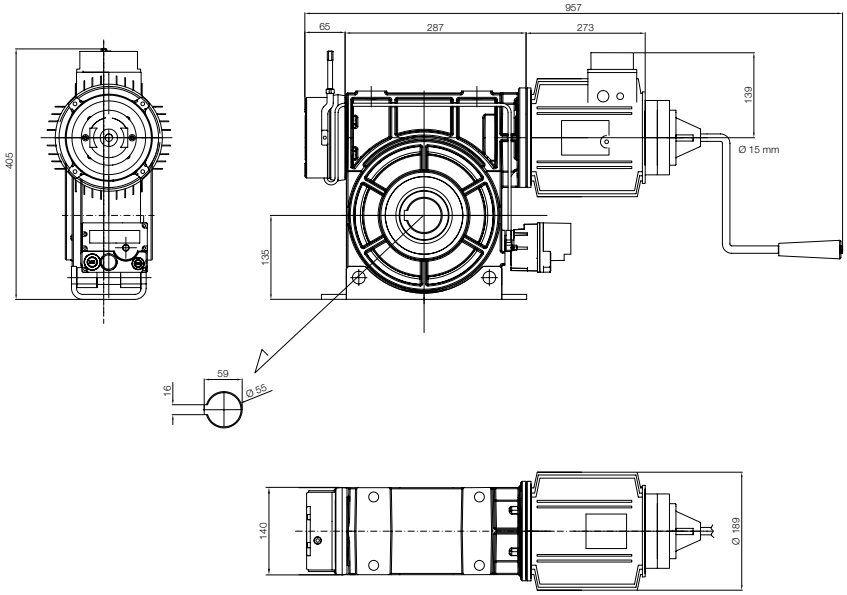

RDF-950-24-KU

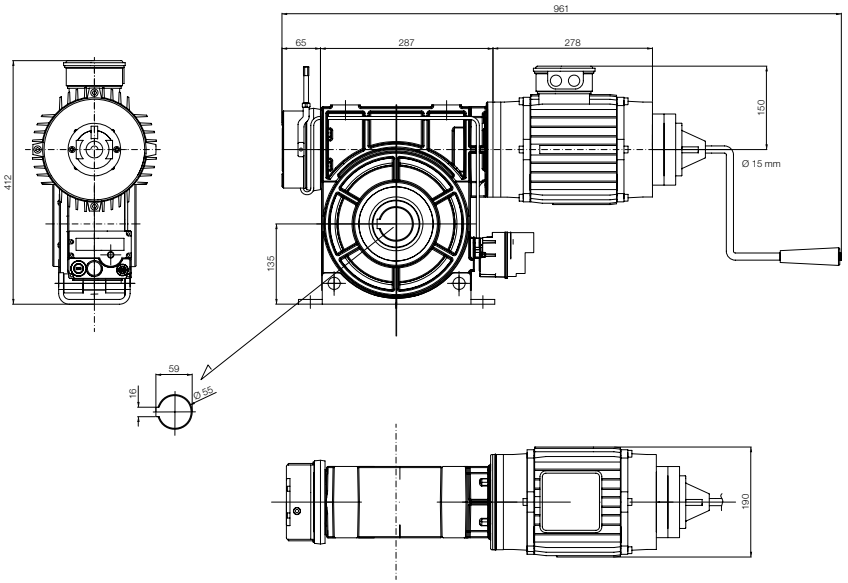

RDF-750-24-KE2

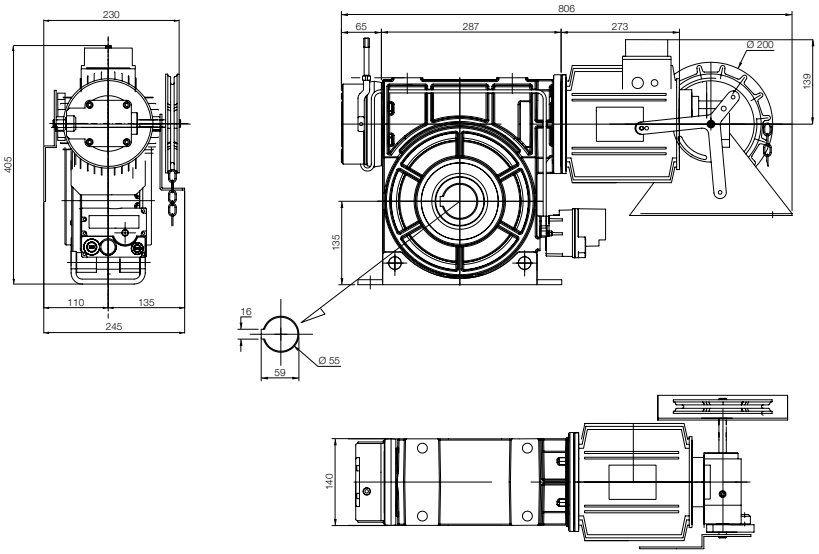

RDF-950-24-KE2

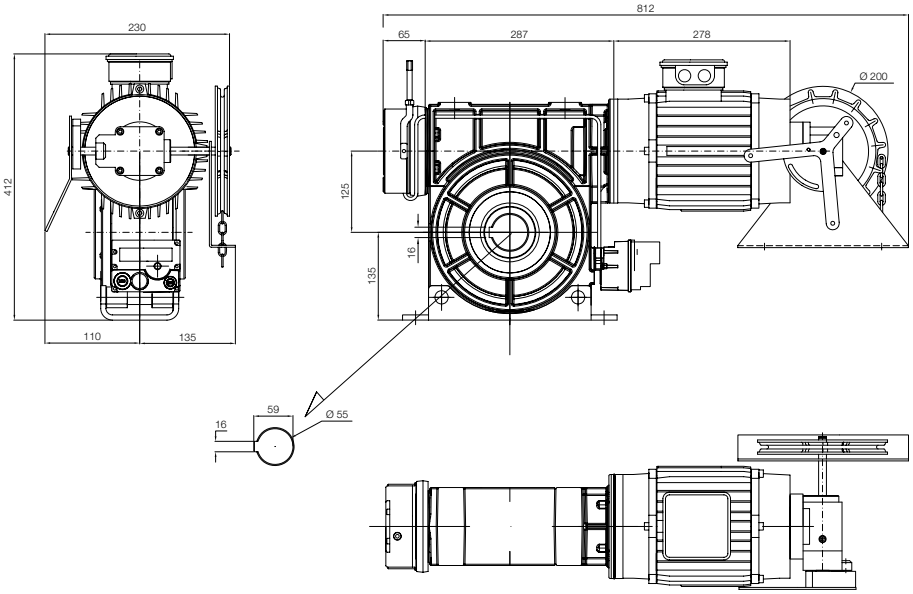

MODEL:

RDF-1250-24-KU

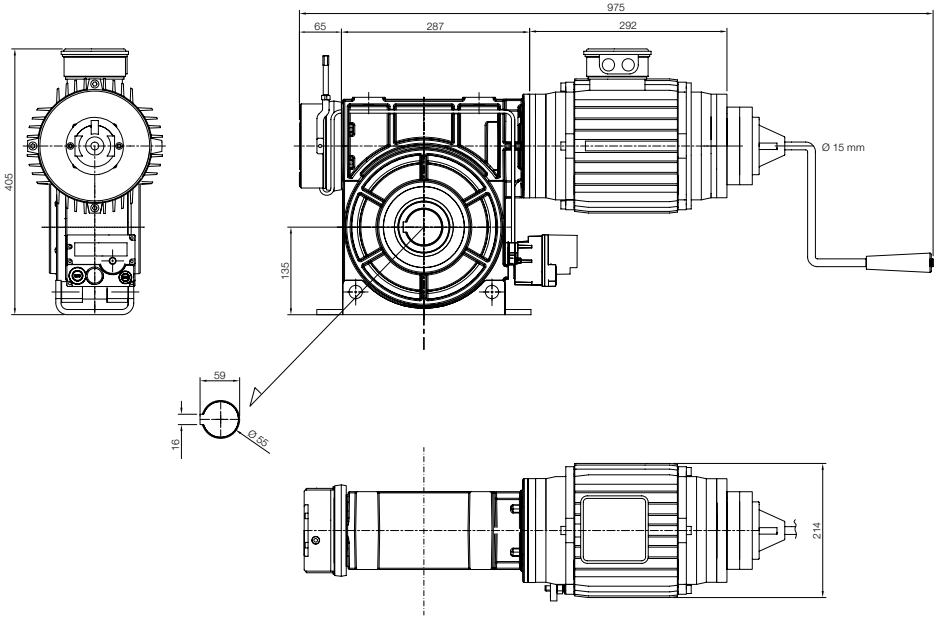

RDF-1400-24-KU

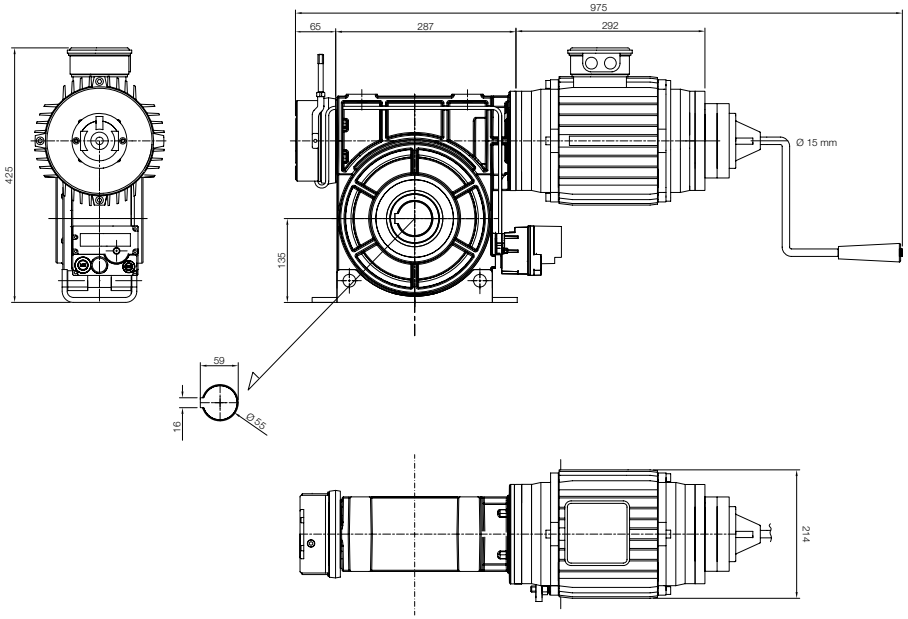

RDF-1250-24-KE2

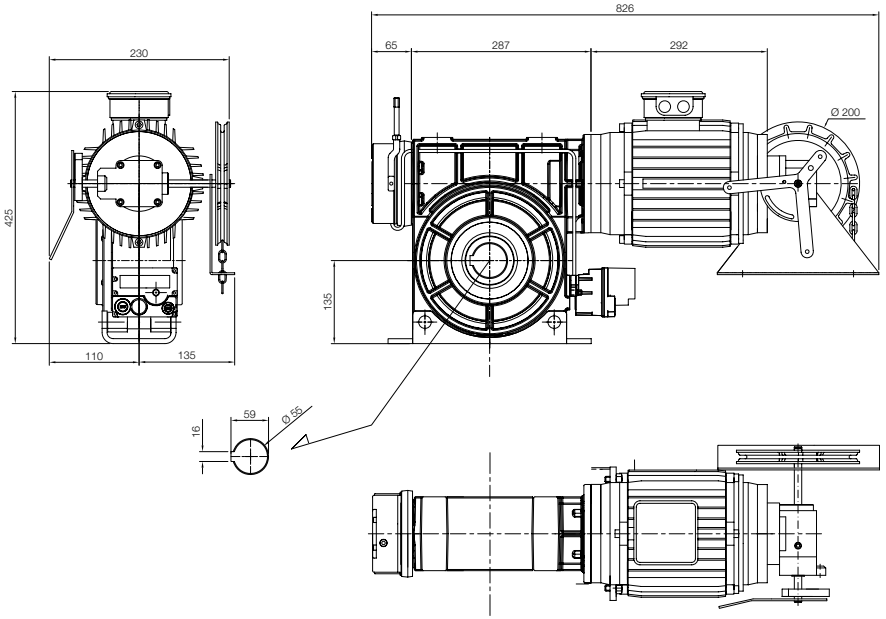

RDF-1400-24-KE2

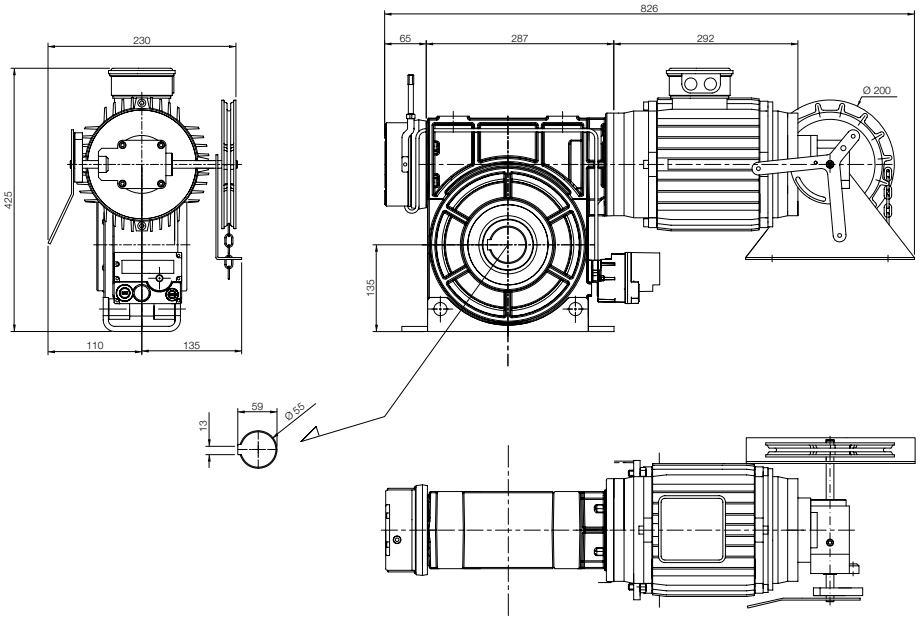

MODEL:

RDFI 250-24-KE / RDFI 350-24-KE

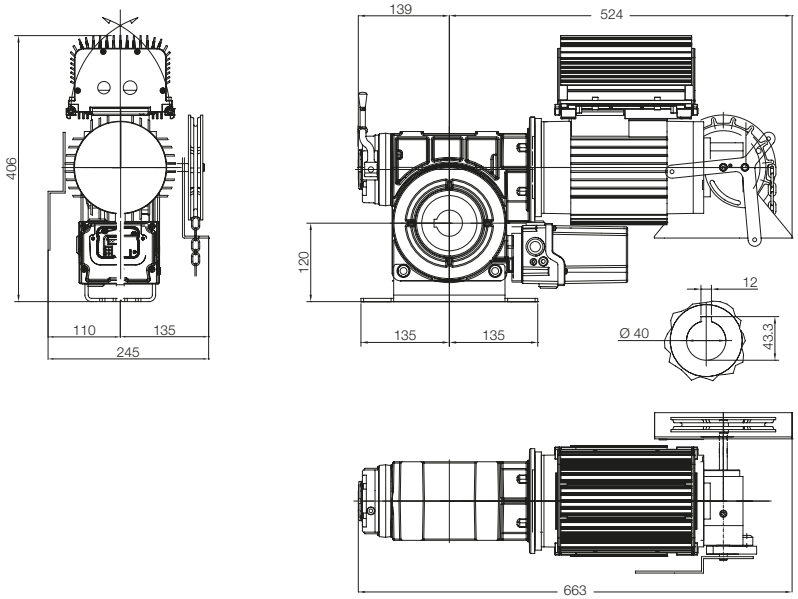

RDFI 500-24 KE

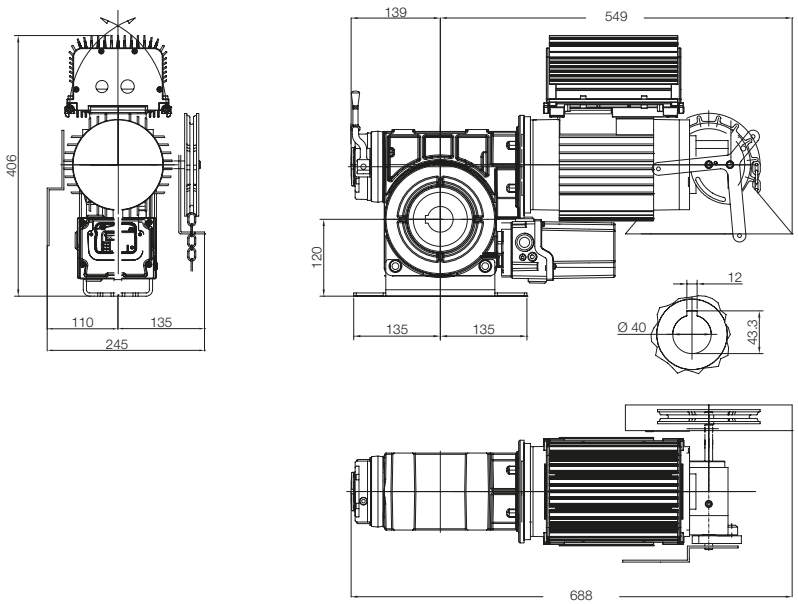

Nice

HDFN / HDFNI

For high speed doors

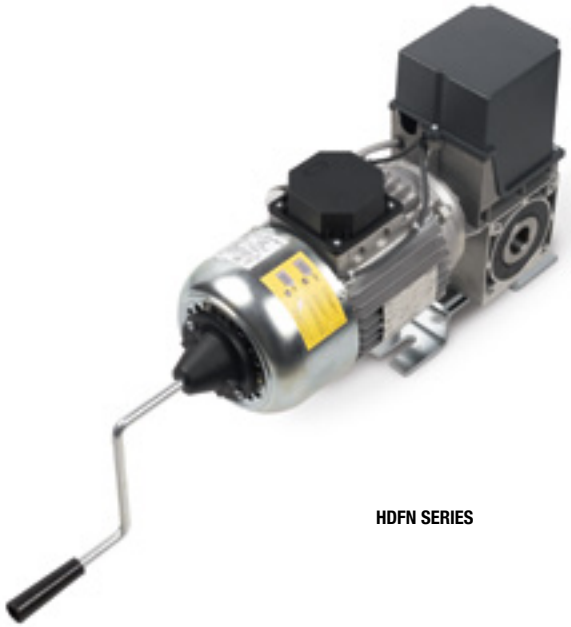

HDFN SERIES

HDFNI SERIES

Electromechanical gearmotor for high speed doors, with or without integrated inverter, electronic limit switches, crank emergency (KU series), integrated anti-fallback device, brake and fixing bracket.

Simple installation
The HDFN/HDFNI series is installed directly on the shaft of the door (Ø 25 mm, Ø 30 mm and Ø 40 mm). The HDFNI gearmotors are equipped with a pre-wired cable and Plug&Play connection with D-Pro family control units.

Compact and efficient:
torque up to 300 Nm, speed up to 140 rpm at 50 Hz.

Practical:
release available with crank emergency.

High safety thanks to the integrated anti-fallback safety system and possibility of connecting safety devices and optical or resistive 8.2 kΩ sensitive bars, the gearmotors are compliant with the most recent European standards and directives.

Speed regulation:
HDFNI models with integrated inverter allow acceleration, braking and speed to be controlled. Including via smartphone thanks to the Nice Industrial app.

EMERGENCY OPERATIONS

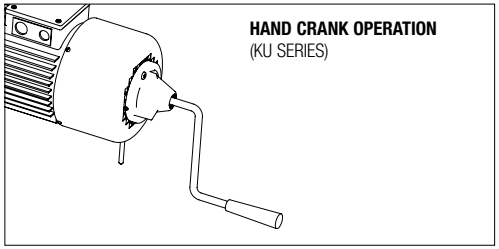

HAND CRANK OPERATION
(KU SERIES)

INSTALLATION DIAGRAM

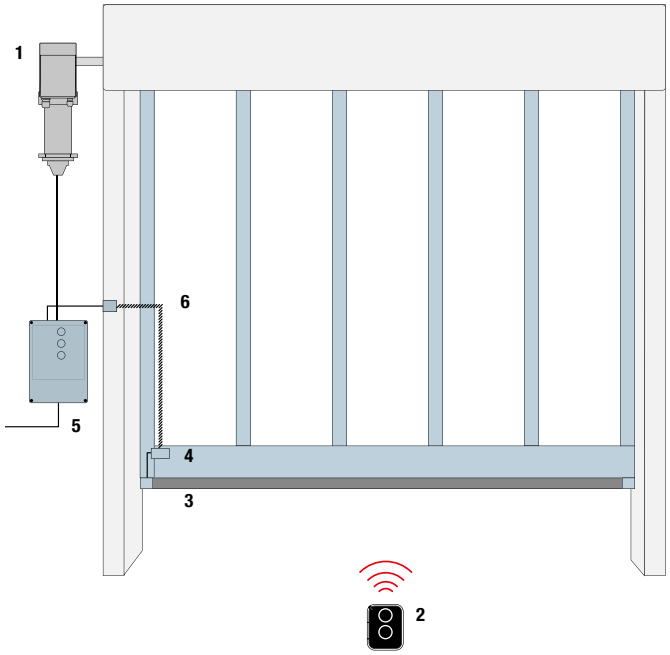

HIGH SPEED DOORS
1. HDFN/HDFNI gearmotor
2. Transmitter
3. Sensitive edge
4. Connector block
5. Control unit
6. Spiral cable

TECHNICAL SPECIFICATIONS

Model	HDFN-35-140	HDFN-45-95	HDFN-60-140	HDFN-80-90	HDFN-160-95	HDFNI-35-140	HDFNI-45-90	HDFNI-60-140	HDFNI-80-90	HDFNI-120-140	HDFNI-160-95	HDFNI-220-70	HDFNI-300-45
Shaft Ø (mm)	25/25.4/30				30/40	25/25.4/30				30/40			
Max. Torque (Nm)	35	45	60	80	160	35	45	60	80	120	160	220	300
Rated Torque (Nm)	27	36	40	60	100	30	36	45	60	100	85	200	240
Output (rpm)	140	95	140	90	95	140	90	140	90	140	95	70	45
Motor Power (kW)	0.75	0.55	1.1	0.9	2.2	1.1	0.9	1.1	0.9	2.2			
Limit Switch Range	15				20	15				20			
Power Supply (V)	3 x 400					1 x 230							
Working frequency (Hz)	50					50							
Rated current (A)	1.9	1.8	2.6	9.7	4	-		4.8		15.8	15.6	12.7	15.5
Cycles/hour	90	1400	80	50	50	233	100	130	76	85	58	40	26
Connection cable (n° x mm²)	4 x 1.5 mm² - 6 x 0.75 mm² - 2 x 0.75 mm²					4 x 1.5 mm² - 6 x 0.75 mm² - 2 x 0.75 mm²							
Operating temperature (°C)	-20 ÷ +40					-20 ÷ +40							
Noise dB(A)	<70					<70							
Protection rating (IP)	54					54							
Weight (kg)	16		17	30	35	18		19	32	37			

How to choose the ideal motor for high speed doors

Hand crank emergency operation, power supply 3 x 400 Vac

Encoder limit switch

- 15 turns
- 20 turns

		Compatibility				
Code	**Description**	**5 m cable**	**7 m cable**	**11 m cable**	**D-Pro Action**	**D-Pro Automatic**
HDFN 35.140 EL15 KU	HDFN 35 Nm 140 rpm Ø 25 mm with brake	**CA0174A00**	**CA0175A00**	**CA0176A00**	**NDCC2100**	**NDCC1000**
	HDFN 35 Nm 140 rpm Ø 25.4 mm with brake					
	HDFN 35 Nm 140 rpm Ø 30 mm with brake					
HDFN 45.95 EL15 KU	HDFN 45 Nm 95 rpm Ø 25 mm with brake					
	HDFN 45 Nm 95 rpm Ø 25.4 mm with brake					
	HDFN 45 Nm 95 rpm Ø 30 mm with brake					
HDFN 60.140 EL15 KU	HDFN 60 Nm 140 rpm Ø 25 mm with brake					
	HDFN 60 Nm 140 rpm Ø 25.4 mm with brake					
	HDFN 60 Nm 140 rpm Ø 30 mm with brake					
HDFN 80.90 EL15 KU	HDFN 80 Nm 90 rpm Ø 25 mm with brake					
	HDFN 80 Nm 90 rpm Ø 25.4 mm with brake					
	HDFN 80 Nm 90 rpm Ø 30 mm with brake					

		Compatibility				
Code	**Description**	**5 m cable**	**7 m cable**	**11 m cable**	**D-Pro Action**	**D-Pro Automatic**
HDFN 160.95 EL20 KU	HDFN 160 Nm 95 rpm Ø 30 mm with brake	**CA0177A00**	**CA0178A00**	**CA0179A00**	**NDCC2100**	**NDCC1000**
	HDFN 160 Nm 95 rpm Ø 40 mm with brake					

Mechanical limt switch

15 turns

Code	Description	Compatibility				
		5 m cable	7 m cable	11 m cable	D-Pro Action	D-Pro Automatic
HDFN 35.140 ME15 KU	HDFN 35 Nm 140 rpm Ø 25 mm with brake	**CA0174B00**	**CA0175B00**	**CA0176B00**	**NDCC2100**	**NDCC1000**
	HDFN 35 Nm 140 rpm Ø 25.4 mm with brake					
	HDFN 35 Nm 140 rpm Ø 30 mm with brake					
HDFN 45.95 ME15 KU	HDFN 45 Nm 95 rpm Ø 25 mm with brake					
	HDFN 45 Nm 95 rpm Ø 25.4 mm with brake					
	HDFN 45 Nm 95 rpm Ø 30 mm with brake					
HDFN 60.140 ME15 KU	HDFN 60 Nm 140 rpm Ø 25 mm with brake					
	HDFN 60 Nm 140 rpm Ø 25.4 mm with brake					
	HDFN 60 Nm 140 rpm Ø 30 mm with brake					
HDFN 80.90 ME15 KU	HDFN 80 Nm 90 rpm Ø 25 mm with brake					
	HDFN 80 Nm 90 rpm Ø 25.4 mm with brake					
	HDFN 80 Nm 90 rpm Ø 30 mm with brake					

20 turns

Code	Description	Compatibility				
		5 m cable	7 m cable	11 m cable	D-Pro Action	D-Pro Automatic
HDFN 160.95 ME20 KU	HDFN 160 Nm 95 rpm Ø 30 mm with brake	**CA0177B00**	**CA0178B00**	**CA0179B00**	**NDCC2100**	**NDCC1000**
	HDFN 160 Nm 95 rpm Ø 40 mm with brake					

Hand crank emergency operation, power supply 1 x 230 Vac, with built-in inverter

Encoder limit switch

- 15 turns
- 20 turns

Code	Description	Compatibility				
		5 m cable	7 m cable	11 m cable	D-Pro Action	D-Pro Automatic
HDFNI 35.140 E15 KU	HDFNI 35 Nm 140 rpm Ø 25 mm with brake	**INCLUDED**	-	-	**NO COMPATIBLE**	**NDCC1100**
	HDFNI 35 Nm 140 rpm Ø 25.4 mm with brake					
	HDFNI 35 Nm 140 rpm Ø 30 mm with brake					
HDFNI 45.90 EL15 KU	HDFNI 45 Nm 90 rpm Ø 25 mm with brake	-	**INCLUDED**			
	HDFNI 45 Nm 90 rpm Ø 25.4 mm with brake					
	HDFNI 45 Nm 90 rpm Ø 30 mm with brake					
HDFNI 60.140 EL15 KU	HDFNI 60 Nm 140 rpm Ø 25 mm with brake					
	HDFNI 60 Nm 140 rpm Ø 25.4 mm with brake					
	HDFNI 60 Nm 140 rpm Ø 30 mm with brake					
HDFNI 80.90 EL15 KU	HDFNI 80 Nm 90 rpm Ø 25 mm with brake					
	HDFNI 80 Nm 90 rpm Ø 25.4 mm with brake					
	HDFNI 80 Nm 90 rpm Ø 30 mm with brake					

Code	Description	Compatibility				
		5 m cable	7 m cable	11 m cable	D-Pro Action	D-Pro Automatic
HDFNI 120.140 EL20 KU	HDFNI 120 Nm 140 rpm Ø 30 mm with brake	-	**INCLUDED**	-	**NO COMPATIBLE**	**NDCC1100**
	HDFNI 120 Nm 140 rpm Ø 40 mm with brake					
HDFNI 160.95 EL20 KU	HDFNI 160 Nm 95 rpm Ø 30 mm with brake					
	HDFNI 160 Nm 95 rpm Ø 40 mm with brake					
HDFNI 220.70 EL20 KU	HDFNI 220 Nm 70 rpm Ø 30 mm with brake					
	HDFNI 220 Nm 70 rpm Ø 40 mm with brake					
HDFNI 300.45 EL20 KU	HDFNI 300 Nm 45 rpm Ø 30 mm with brake					
	HDFNI 300 Nm 45 rpm Ø 40 mm with brake					

MODEL:

HDFN 35-140 KU, HDFN 45-90 KU, HDFN 60-140 KU, HDFN 80-90 KU

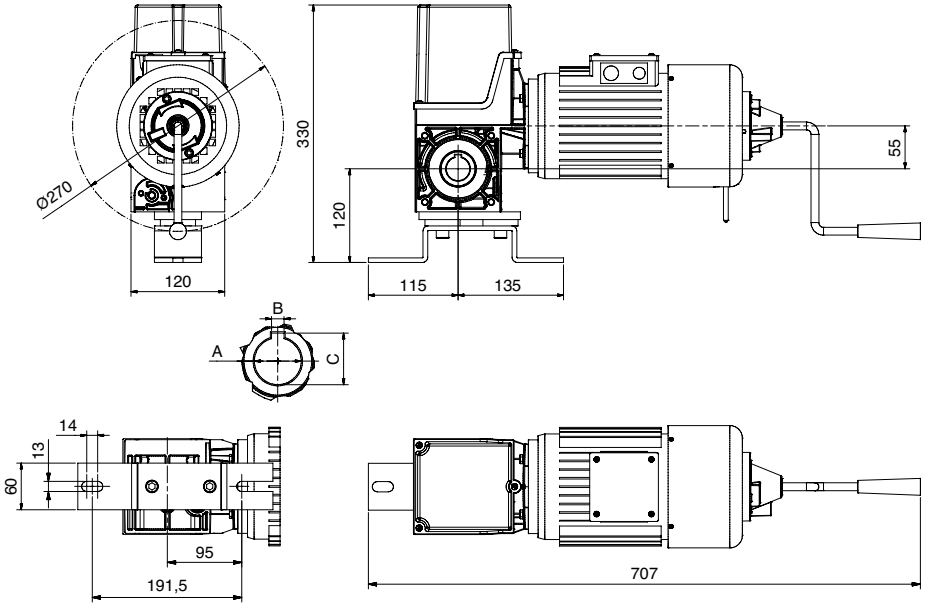

	Ø A	B	C
HDFN 35-140 KU	25	8	28,3
HDFN 35-140 KU	25,4	6,35	28,4
HDFN 35-140 KU	30	8	33,3
HDFN 45-90 KU	25	8	28,3
HDFN 45-90 KU	25,4	6,35	28,4
HDFN 45-90 KU	30	8	33,3
HDFN 60-140 KU	25	8	28,3
HDFN 60-140 KU	25,4	6,35	28,4
HDFN 60-140 KU	30	8	33,3
HDFN 80-90 KU	25	8	28,3
HDFN 80-90 KU	25,4	6,35	28,4
HDFN 80-90 KU	30	8	33,3

HDFN 160-95 KU

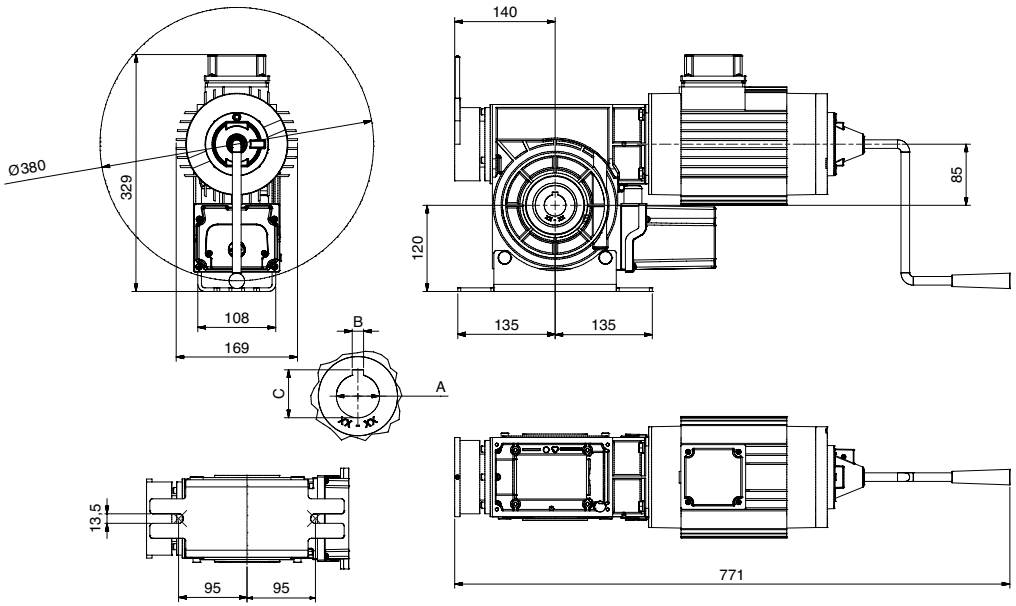

	Ø A	B	C
HDFN 160-95 KU	40	12	43,3

MODEL:

HDFNI 35-140 KU, HDFNI 45-90, HDFNI 60-140 KU, HDFNI 80-90 KU

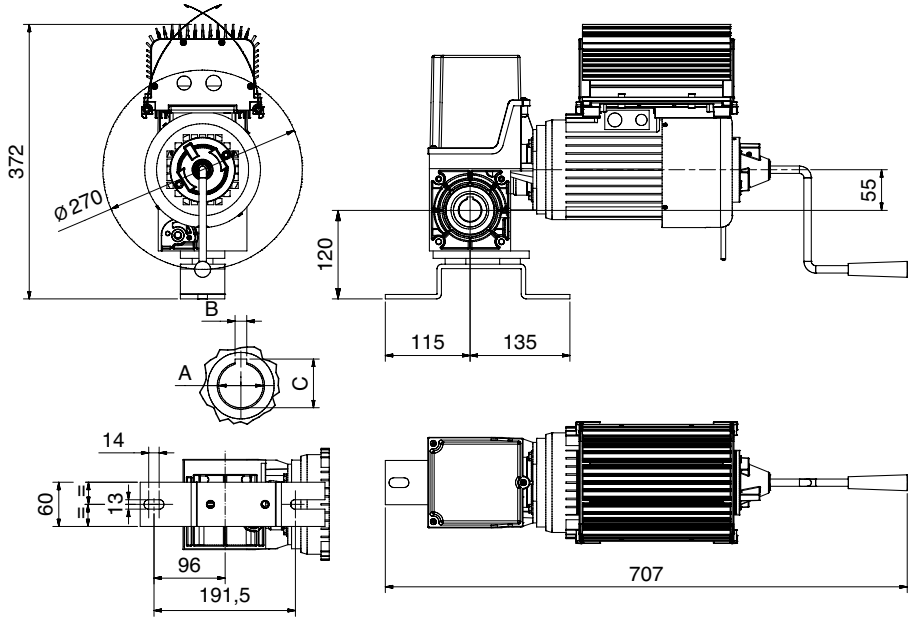

	Ø A	B	C
HDFNI 35-140	25	6	28,3
HDFNI 35-140	25,4	6,35	28,4
HDFNI 35-140 KU	30	8	33,3
HDFNI 45-90	25	6	28,3
HDFNI 45-90	25,4	6,35	28,4
HDFNI 45-90 KU	30	8	33,3
HDFNI 80-90 KU	25	6	28,3
HDFNI 80-90 KU	25,4	6,35	28,4
HDFNI 80-90 KU	30	8	33,3
HDFNI 60-140 KU	25	6	28,3
HDFNI 60-140 KU	25,4	6,35	28,4
HDFNI 60-140 KU	30	8	33,3

HDFNI 120-140 KU, HDFNI 160-95 KU, HDFNI 220-70 KU, HDFNI 300-45 KU

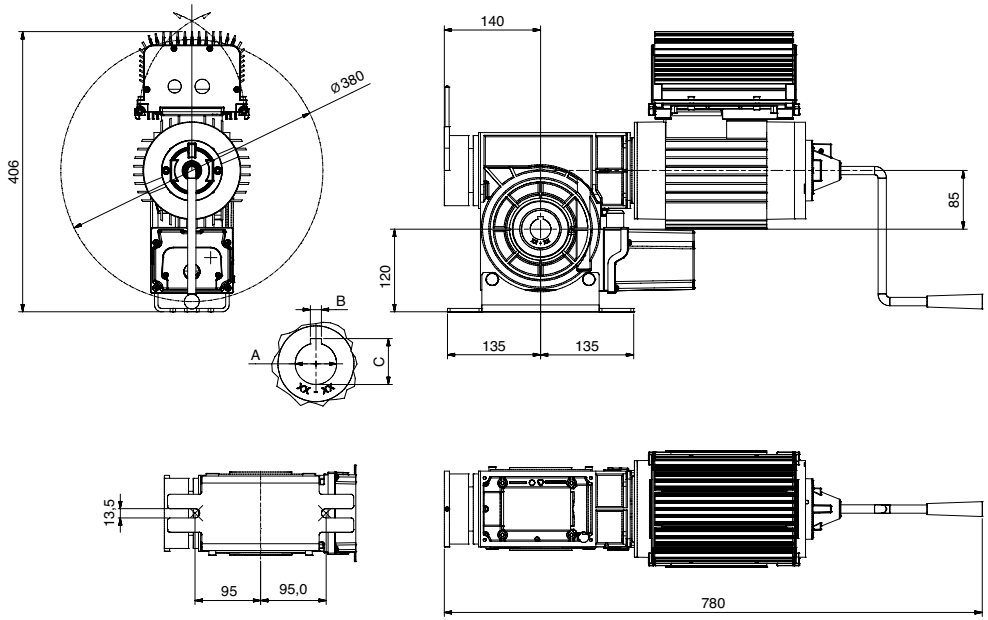

	Ø A	B	C
HDFNI 120-140 KU	30	8	33,3
HDFNI 120-140 KU	40	12	43,3
HDFNI 160-95 KU	30	8	33,3
HDFNI 160-95 KU	40	12	43,3
HDFNI 220-70 KU	30	8	33,3
HDFNI 220-70 KU	40	12	43,3
HDFNI 300-45 KU	40	12	43,3

Electrical Accessories

For D-Pro Automatic control units

NDA004
Bluetooth module for D-Pro Automatic control unit management via smartphone.

NDA006
K60 module for D-Pro Automatic control unit, to communicate via CAN bus (combined with NDA008 module).

NDA008
K65 module for D-Pro Automatic control unit, for remote control (combined with NDA0006 module).

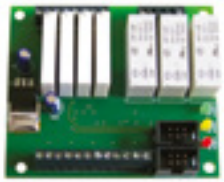

NDA030
K30 expansion module for D-Pro Automatic to add further inputs, outputs and to control traffic lights.

NDA070
K70 expansion module for D-Pro Automatic for 2 channels loop detector.

For D-Pro Action control units

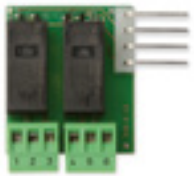

NDA040
For optional potential free outputs.

IBT4N
Interface module for O-View programmer connection.

IT4WIFI
Smart Wi-Fi interface to control via smartphone Nice automations compatible with the BusT4 (Opera) protocol.

Other accessories

720000001100
CEE threephase power supply plug, 1m long.

CA8.5320
Schuko singlephase, 90°, 2 m long.

730000001023
Main switch for control units.

730000001030
Emergency switch, Normally Closed .

920512000730
Wall mounted external push button, open-stop-close buttons, 7 m long cable.

Security devices

920132111001
Optosensors with Diagnosis function (10.5 m long cable).

920081155516
Spiralcable 5 x 0,5 qmm, 0,8 m spiraled / 1,6 m stretched.

92008115530
Spiralcable 5 x 0,5 qmm, 0,8 m spiraled / 3 m stretched.

920081155550
Spiralcable 5 x 0,5 qmm, 0,8 m spiraled / 5m stretched.

920821000010
Safety switch against possible cable breaks or slackering.

920811000010
Slack Rope Cylindrical Switch Rope Brake against cable breaks.

NDA010
Junction Box with integrated pneumatic switch for pneumatic safety edge.

NDA011
Junction Box black, with board, plugable with hole Ø 16m.

NDA012
Junction Box black, with board, plugable with hole Ø 16 m incl. SBA-Sensor for autom. Floor Level Regulation.

NDA013
Junction Box black, with board, plugable without hole.

Code	Description
920091100085	Connecting Cable for 2 junction boxes, lenght 8.5 m
920540100041	Roller Lever Switch
920670000020	Wicked Door Contact
TCLS	Light Curtain 2.500 mm
TCLS1	Light Curtain 2.030 mm
TCLSC	Connecting Cable for Light Curtain 10 m
TCLSC3	Connecting Cable for Light Curtain 3 m
TCLSFSS230	FSS controler for Light Curtain 230 Vac
TCLSFSS24	FSS controler for Light Curtain 24 Vdc
920141000010	Rubber Profile 1m
920320228100	C-rail, Aluminium 28 mm x 10 mm, in 2 m-pcs.

Electrical Accessories

Photocells

EPS
Pair of outdoor photocells slim.

EPSA
Pair of outdoor photocells slim, burglar-resistant metal body.

EPM
Pair of outdoor photocells.

EPMO
Pair of outdoor photocells, 30° positionable.

EPMA
Pair of outdoor photocells, burglar-resistant metal body.

EPMAO
Pair of outdoor photocells, 30° positionable, burglar-resistant metal body.

EPL
Pair of surface-mounted photocells large.

EPLO
Pair of surface-mounted photocells large, 30° positionable.

EPLIO
Pair of photocells large for recessed mounting, 30° positionable.

EKA03
Bowl for recessed mounting (depth 66 mm) for installation of EKSI, EKSIEU. Also compatible with EPLIO, EPLIOB, EDSI, EDSIB.

F210
Pair of optical devices for sensitive edges fastened on moving door, can be swivelled through 210° with relay output. Battery kit (fta1/fta2) compulsory..

FA1
Vandal-proof metal shell.

EPMOR
Surface-mounted reflective photocell + reflective mirror

Selectors, proximity reader and flashing light

EDSWG
Radio digital selector compatible with the receivers of the flor series.

EKSEU
Key selector Era series, european cylinder, for outdoor installation.

EKSIEU
Key selector era series, european cylinder, for recessed mounting.

EKS
Key selector era series, for outdoor installation.

EKSI
Key selector era series, for recessed mounting.

ETP
Proximity reader for transponder cards MOCARD and MOCARDP to be combined with the MORX decoder

MORX
Decoder for 1 etp or up to 4 EDS/EDSI connected in parallel, with 1 BM1000 memory for 255 combinations.

MOCARD
Transponder card programmable via OBOX.

MOCARDP
Transponder card programmable via OBox, with sequential coding for multiple entry.

HSB1
Transponder badge newly programmable via OBox, with sequential coding for multiple entry.

ELAC
Signal LED flashing light, 90-240 Vac, for preset control units.

Other accessories

Code	Description
CHS	Neutral key for EKS, EKSI
CHEU	Neutral key for EKSEU, EKSIEU
EKA02	Finishing kit for EDSI, EDSIB, EKSI, EKSIEU installation
EKA03	Bowl for recessed mounting (depth 66 mm) for installation of EKSI, EKSIEU. Also compatible with EPLIO, EPLIOB, EDSI, EDSIB.

Mechanical accessories

Adapters

Code	Description	A	B	L
NDA500	Adapter from 31.75 to 25.4 mm shaft	31.7	25.4	110
NDA502	Adapter from 40 to 30 mm shaft	40	30	120
NDA503	Adapter from 40 to 31.75 mm shaft	40	31.7	120
NDA504	Adapter from 55 to 40 mm shaft	55	40	140
NDA505	Adapter from 30 to 25.4 mm shaft	30	25.4	120
NDA506	Adapter from 30 to 25 mm shaft	30	25	110

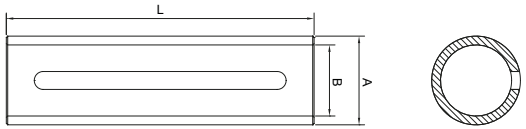

Code	Description	A	B	L
NDA501	Adapter from 40 to 25.4 mm shaft	40	25.4	120
NDA507	Adapter from 40 to 25 mm shaft	40	25	120

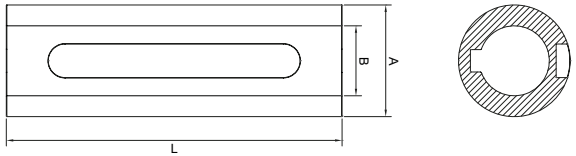

Chain emergency operation systems

Code	Description
NDSP0009	Emergency handchain system for SWN, SD, SDN
NDSP0004	Emergency handchain system for RDF140

Code	Description
NDSP0006	Emergency handchain system for RDF-220/350
NDSP0002	Emergency handchain system for RDF-380/750-9,5
NDSP0007	Emergency handchain system for RDF750-24/850 Nm and above

Extra chain

Code	Description
900029000050	Additional chain, 5 m length
100031010000	Additional chain, in rolls of 100 m
100031010001	Link for additional chain

Heating devices

PW1

TW1

Code	Description
PW1	Heating element for the automation system
TW1	Regulation thermostat

Accessories for rolling shutters

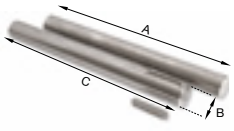

Code	Description	A	Ø B	C
NDA540	Kit with shafts Ø 30 mm (motor side with key + opposite side)	395	30	495
NDA541	Kit with shafts Ø 40 mm (motor side with key + opposite side)	395	40	495
NDA542	Kit with shafts Ø 55 mm (motor side with key + opposite side)	495	55	495

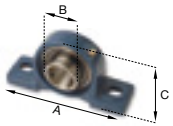

Code	Description	A	Ø B	C
910510000300	Shaft bearing Ø 30 mm	165	30	84
910510000400	Shaft bearing Ø 40 mm	184	40	100
910510000550	Shaft bearing Ø 55 mm	206	50	114

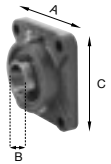

Code	Description	A	Ø B	C
133003201	Shaft bearing, wall mounted Ø 30 mm	108	30	108
133055601	Shaft bearing, wall mounted Ø 40 mm	130	40	130

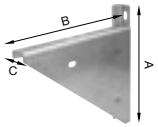

Code	Description	A	B	C
910310003000	Triangular bracket for horizontal mounting, up to 300 kg	445	460	63
910310005300	Triangular bracket for horizontal mounting, up to 530 kg	520	550	70
910310013000	Triangular bracket for horizontal mounting, up to 1300 kg	445	462	63
910310025000	Triangular bracket for horizontal mounting, up to 2500 kg	714	650	154

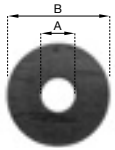

Code	Description	Ø A	Ø B
131176001	Disk for Shaft, to suit tube Ø 98 x 2; 100 x 3 e 101.6 x 3.6 mm	93	30
141103201	Disk for Shaft, to suit tube Ø 133 x 4 mm	124	30
131176201	Disk for Shaft, to suit tube Ø 159 x 4.5 mm	149	30
141109501	Disk for Shaft, to suit tube Ø 193.7 x 5.4 mm	181.5	30
131046101	Disk for Shaft, to suit tube Ø 133 x 4 mm	124	40
141026201	Disk for Shaft, to suit tube Ø 193.7 x 5.4 mm	181.5	40
141106101	Disk for Shaft, to suit tube Ø 219.1 x 5.9 mm	206	40
141106201	Disk for Shaft, to suit tube Ø 244.5 x 6.3 mm	231	40

Accessories for chain-driven rolling shutters

Code	Description
NDA520	Chain Reduction Kit 3/4",2:1,Shaft Ø 30 mm, Pignion 12 + 24 Tooth, 2m Roller Chain
NDA521	Chain Reduction Kit 1",2:1,Shaft Ø 40 mm, Pignion 12 + 24 Tooth, 2m Roller Chain
NDA522	Chain Reduction Kit 1"1/4, 2:1,Shaft Ø 55 mm, Pignion 12 + 24 Tooth, 2m Roller Chain
NDA523	Chain Reduction Kit 3/4",3:1,Shaft Ø 30 mm, Pignion 12 + 36 Tooth, 2.5m Roller Chain
NDA524	Chain Reduction Kit 1",3:1,Shaft Ø 40 mm, Pignion 12 + 36 Tooth, 2.5m Roller Chain
NDA525	Chain Reduction Kit 1"1/4, 3:1,Shaft Ø 55 mm, Pignion 12 + 36 Tooth, 2.5m Roller Chain
NDA526	Chain Reduction Kit 1:1 for SD, tension bracket, Shaft Ø 25.4 mm, Pignion 12 + 12 Tooth, 1,5m Roller Chain

Code	Description
NDA560	Small motors foot bracket for chain reduction system
NDA562	Medium motors foot bracket for chain reduction system
NDA563	Big motors foot bracket for chain reduction system

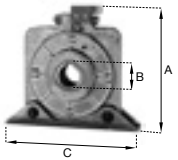

Code	Description	A	Ø B	C
245520003	Safety Bearing Max Torque 332 Nm	185	30	80
245530003	Safety Bearing Max. Torque 552 Nm	225	40	100
245300001	Safety Bearing Max. Torque 1063 Nm	320	50	150
245310001	Safety Baering con Max. Torque 1943 Nm	380	250	180

Nice
Your Era One long range
Your Era One long range controls:
15%
button #1
button #2
Nice
Nice

Nice

NEW BiDi

Era One LR & OXI LR

Bidirectional transmitters and receivers with LoRa® long range technology

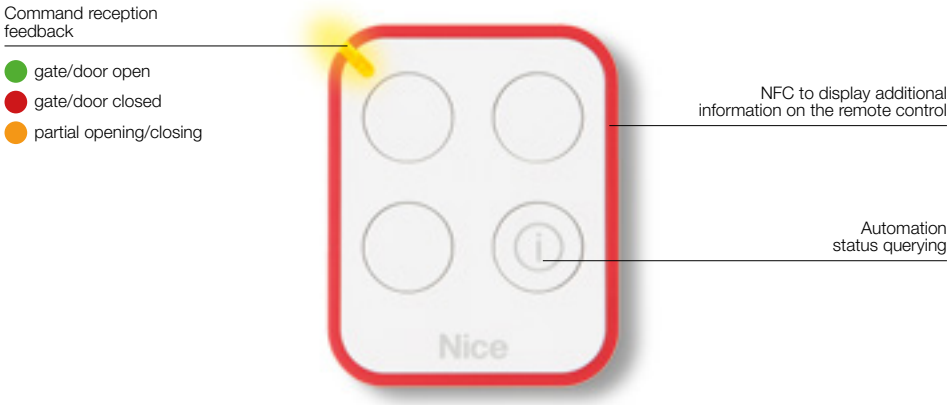

4 key transmitter: 3 radio channels and 1 key to request automation status.

433.92 MHz radio frequency with rolling code encoding, identity code management and self-learning.

Long range commands: LoRa® technology sends commands over a distance about 10 times greater than previous radio protocols. Automation control has never been so efficient!

Even at a distance from the system, you can enable a new transmitter by using another Era One LR transmitter already enabled in the receiver, thanks to exchange of the **identity code** between them.

Elegant and convenient: the Era One LR transmitter can be used as a stylish, high-tech keyring or fixed to the wall or your car's dashboard with the handy support included in the pack.

Era One LR bidirectional, ideal for use in cities or places where many devices are present. The bidirectional radio protocol uses LoRa® modulation to improve immunity from interference.

Radio receiver with connector, bidirectional, with LoRa® technology.

The OXILR is compatible with all Nice control units with SM connector and so can also make existing Nice automations long range and bidirectional.

Ergonomic design: antenna connectors, programming LED and key in convenient, handy positions.

Maximum flexibility: they can memorise up to 1,024 bidirectional transmitters with LoRa® technology.

TECHNICAL SPECIFICATIONS

Code	Description	Pc/Pack
ON3ELR	3 channels, 433.92 MHz, bidirectional, with LoRa® technology	10
ONELRKIT	KIT with LoRa® technology Contains: 2 x ON3ELR, 1 x OXILR, 1 x OX2UBP	1

	Carrier frequency	Estimated range	Encoding	Power supply	Battery life	Ingress protection class	Dimensions Weight
ON3ELR	433.92 MHz	1 Km; 100 m (if inside buildings)*	LR	3 Vdc; lithium battery type CR2032	2 years (with 10 transmissions per day)	IP40 (use in protected environments)	45x56x11 h mm 18 g

* Transmitter range and receiver reception capacity may be affected by any devices operating on the same frequency in the area and by the position of the system's radio antenna.

ONELRKIT Kit with LoRa® technology for installation in third party automations, thanks to the OX2UBP hardware interface.

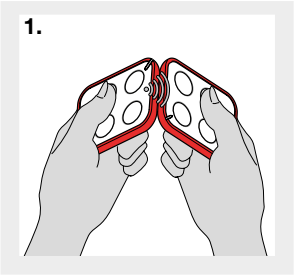

1. Code exchange between a memorized transmitter and a new one, to be memorized.

2. The NFC technology and a dedicated web page enable further information to be provided on the transmitter and battery status.

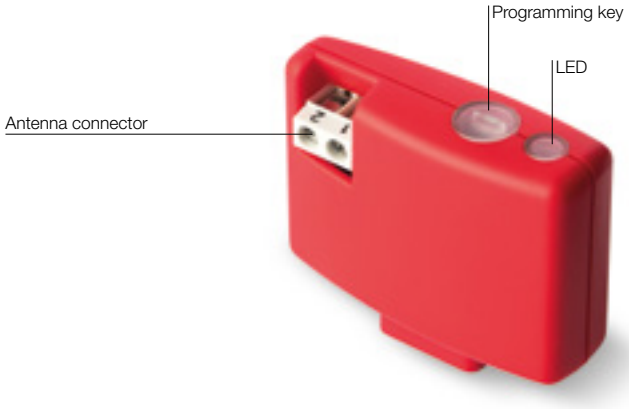

RECEIVER TECHNICAL SPECIFICATIONS

Code	Description	Pc/Pack
OXILR	Radio receiver with connector, 433.92 MHz, bidirectional, with LoRa® technology	1

	Reception frequency	Transmission frequency	Input impedance	Sensitivity	Encoding	Number of channels	Power supply	Absorption	Ingress protection class	Dimensions Weight
OXILR	433.92 MHz	433.92 MHz	50 Ohm	-118 dBm	LR	4 (on "SM" plug-in connector)	5 Vdc	50 mA (max)	IP 30	49.5x18x41.9 h mm 22 g

Nice

Era One

Transmitters and receivers

1, 2, 4, 9 channel transmitters and prewired receivers with connector, with and without built-in transmitter.

433.92 MHz rolling code, with management of Identity Codes and Certificates, self-learning and built-in proximity receiver; with 72 bit O-Code encoding, also compatible with receivers with Nice FloR encoding.

Available in versions with multiple input sequential encoding (Era OneC).

Advanced: uses data processing and recognition systems that increase its degree of security and deliver a threefold reduction in automation response times.

Easy memorisation, even at a distance: thanks to Opera receivers.

Safe: if a transmitter is stolen or lost, with the O-Box the user can **replace it**, maintaining the same functions as in the previous one, **disable**the old transmitter by increasing the priority level on the new Era One.

There are two options for enabling a new Inti transmitter, **even at a distance from the system:**

- using a transmitter already programmed in the receiver, thanks to the enabling **Code exchange** between the two;
- using the Nice O-Box connection interface; the receiver's **Certificate** is entered by just placing the new Inti next to the O-Box and following the guided procedure on a PC or PDA.

Extremely practical: using the O-Box software, the Era OneC version allows whole packs of 10 devices to be programmed in a single procedure, without even opening them!

Elegant and convenient: the Era One transmitter can be used as a stylish, high-tech keyring or fixed to the wall or your car's dashboard with the handy support included in the pack.

Era OneFM, ideal for use in cities or places where many devices are present.

868.46 MHz Rolling Code transmitter line, using frequency modulation (FM), less sensitive to interference than amplitude modulation AM.

TRANSMITTER TECHNICAL SPECIFICATIONS

Code	Description	Pc/Pack
ON1E	1 channel, 433.92 MHz	10
ON2E	2 channels, 433.92 MHz	10
ON4E	4 channels, 433.92 MHz	10
ON9E	9 channels, 433.92 MHz	10
ON1CE	1 channel, 433.92 MHz, with multiple input sequential encoding	10
ON2CE	2 channels, 433.92 MHz, with multiple input sequential encoding	10
ON4CE	4 channels, 433.92 MHz, with multiple input sequential encoding	10
ON1EFM	1 channel, 868.46 MHz	10
ON2EFM	2 channels, 868.46 MHz	10
ON4EFM	4 channels, 868.46 MHz	10
ON9EFM	9 channels, 868.46 MHz	10

	Carrier frequency	Estimated range	Encoding	Power supply	Battery life	Ingress protection class	Dimensions Weight
ON_E, ON_CE	433.92 MHz	200 m (outdoor); 35 m (if inside buildings)*	O-Code 72 bit; rolling code	3 Vdc; type CR2032 lithium battery	2 years (with 10 transmissions per day)	IP40 (use in protected environments)	45x56x11 h mm 18 g
ON_EFM	868.46 MHz						

* Transmitter range and receiver reception capacity may be affected by any devices operating on the same frequency in the area.

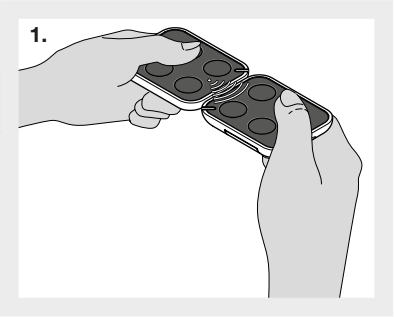

Code exchange between a memorized transmitter and a new one, to be memorized.

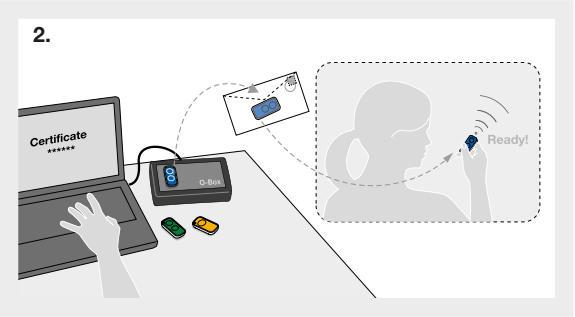

Possible memorisation using Nice O-Box and the "Certificate".

Nice

Era Flor

Transmitters and receivers

1, 2, 4 channel transmitters with a new stylish design.

433.92 MHz rolling code system with self-learning function.

Also available in versions with multiple input sequential encoding (Era FlorCE).

Absolute security: rolling code transmission makes the transmitter impossible to clone.

Ideal solution for the management of multi-user apartment block systems thanks to the unique, personal code.

Easy duplication of new transmitter close to the system by using an authorised transmitter or directly using a key on the receiver, while a LED displays the various functions.

Extremely practical: using the O-Box programming unit, the Era Flor-CE version allows whole packs of 100 devices to be programmed in a single procedure, without even opening them.

The O-Box and dedicated software applications for PC and PDA allow:

- **quick, user-friendly programming** of receivers and transmitters;
- **management** and printout **of code list**;
- creation of individual **installation databases** (useful in multi-user systems).

Optimal autonomy and low consumption.

Elegant and convenient: the Era FloR transmitter can be used as a stylish, high-tech keyring or fixed to the wall or your car's dashboard with the handy support included in the pack.

Total compatibility: with previous Flor series receivers (universal, universal modular and with Nice or SM connector) and with the One receivers (OXI/OXIT, OX2/OX2T and OX4T).

TRANSMITTER TECHNICAL SPECIFICATIONS

Code	Description	Pc/Pack
FLO1RE	1 channel Era FloR transmitter	10
FLO2RE	2 channel Era FloR transmitter	10
FLO4RE	4 channel Era FloR transmitter	10
FLO1RCE	1 channel Era FloR transmitter with multiple input sequential encoding	10
FLO2RCE	2 channel Era FloR transmitter with multiple input sequential encoding	10
FLO4RCE	4 channel Era FloR transmitter with multiple input sequential encoding	10

Carrier frequency	Estimated range	Encoding	Power supply	Battery life	Ingress protection class	Dimensions Weight
433.92 MHz	150/200 with tuned antenna in open spaces*	52 bit digital (4.5 million billion combinations)	3 Vdc; lithium battery type CR2032	3 years (with 10 transmissions per day)	IP40 (use in protected environments)	45x56x11 h mm 18 g

* Transmitter range and receiver reception capacity may be affected by any devices operating on the same frequency in the area.

FLO1RE

FLO2RE

FLO4RE

Nice

Receivers

Era Inti, One, Flor, NiceWay

The complete line of receivers with Opera system functions, suitable for all installation requirements:

- **with connector**, compatible with latest-generation Nice control units with SM port;
- **universal prewired**, for use with all types of control unit, for the control of any automation, lighting or irrigation system or other electric circuits.

Maximum flexibility: up to 1024 transmitters can be memorised.

Convenient and practical: the inclusion of a transmitter in the OXIT/OXITFM, OX2T/OX2TFM and OX4T receivers allows radio codes to be accessed by means of the O-Box multifunction interface even when in inaccessible positions.

OXIT/OXITFM, OX2T/OX2TFM and OX4T receivers can be used as signal repeaters to increase the operating distance between transmitters and other One series receivers.

Secure use, thanks to the 3 password-protected levels.

The O-Box and dedicated software applications for PC and PDA allow:

- **quick, user-friendly programming** of receivers and transmitters;
- **management** and printout **of code list**;
- creation of individual **installation databases** (useful in multi-user systems).

SM plug-in receiver with Flor system functions, step-by-step and anti-burglar functions.

Management of multi-user system: through the unique, personal code: the recognition receivers can receive and memorise up to 255 codes.

Memorisation: a particular receiver output can be associated to each transmitter key (e.g. key 3 TX= output 1 RX).

433.92 MHz RECEIVERS, WITH OPERA SYSTEM FUNCTIONS

Code	Description	Pc/Pack
WITH CONNECTOR		
OXI	4 channels, without built-in transmitter	1
OXIT	4 channels, with built-in transmitter	1
PRE-WIRED UNIVERSAL		
OX2	2 channels, without built-in transmitter	1
OX2T	2 channels, with built-in transmitter	1
OX4T	4 channels, with built-in transmitter	1

OXI

OX2, OX2T

OX4T

868.46 MHz RECEIVERS, WITH OPERA SYSTEM FUNCTIONS

Code	Description	Pc/Pack
WITH CONNECTOR		
OXIFM	4 channels, without built-in transmitter	1
OXITFM	4 channels, with built-in transmitter	1
PRE-WIRED UNIVERSAL		
OX2FM	2 channels, without built-in transmitter	1
OX2TFM	2 channels, with built-in transmitter	1

OXIFM, OXITFM

OX2FM, OX2TFM

433.92 MHz RECEIVERS, WITH FLOR SYSTEM FUNCTIONS

Code	Description	Pc/Pack
SM WITH CONNECTOR		
SMXI	Up to 4 channels with 256-codes memory	1
PROFESSIONAL, TUNED DIRECTIONAL AERIAL		
ABF	Bracket mounted	1

MULTI-FUNCTION INTERFACE

Code	Description	Pc/Pack
OBOX2	Dual Band Interface, for 433.92/868.46 MHz devices, complete with software, supplied with USB connection cable	1
OBOX2B	Dual Band Interface, for 433.92/868.46 MHz devices, complete with software, with USB connection cable and built-in Bluetooth module	1

O-BOX

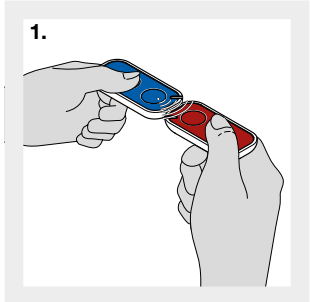

Code exchange between a memorized transmitter and a new one, to be memorized.

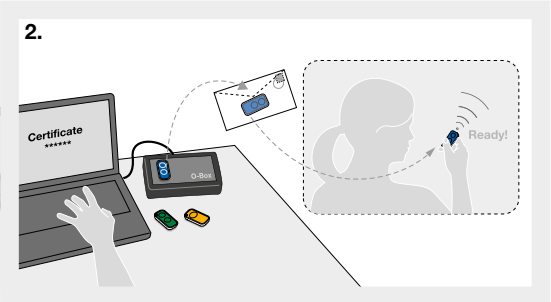

Possible memorisation using Nice O-Box and the “Certificate”.

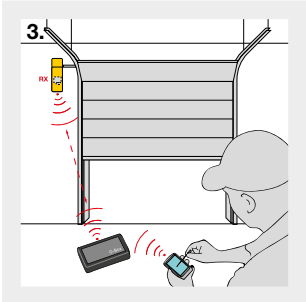

The presence of a “transmitter” in the OXIT, OX2T and OX4T receivers allows radio codes to be accessed by means of the O-Box multifunction interface.

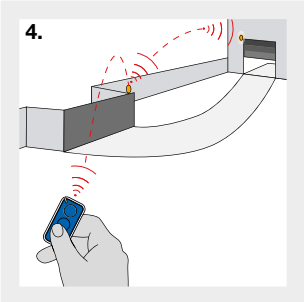

OXIT, OX2T and OX4T receivers can be used as signal repeaters.

RECEIVER WITH OPERA SYSTEM - TECHNICAL SPECIFICATIONS

Code	Reception frequency (MHz)	Transmission frequency (MHz)	Input impedance (Ohm)	Sensitivity	Encoding	Number of channels	Relay contact	Power supply	Absorption	Ingress protection class	Dimensions (mm)	Weight (g)
OXI	433,92	-	50	>0.5 µ V for successful signal	O-Code, O-Code/A, FloR, FloR/A, Flo, Smilo	4 (15 on BUS T4)	-	5 Vdc	50 mA (max)	IP 30	49.5x18x41.9 h	22
OXIT		433,92	52		O-Code, FloR, Flo				30 mA (max)		50x19x45 h	20
OX2		-				2	max 0.5 A 50 V (NA)	from 12 to 28 Vdc/Vac	80 mA (max) with relays active		58x86x22 h	55
OX2T		433,92										
OX4T						4 relays with NO and NC contacts, voltage-free	5 A - 250 V	110 ÷ 240 Vac 50/60 Hz	80 mA	IP 44 (with container intact)	128x112x43 h	260
OXIFM	868,46	-		>0.8 µ V for signals with successful outcomes	O-Code	4 (15 on BUS T4)	-	5 Vdc	30 mA (max)	IP 30	50x19x45 h	20
OXITFM		868,46										
OX2FM		-				2	max 0.5 A 50 V (NA)	from 12 to 28 Vdc/Vac	100 mA (max) with relays active		58x86x22 h	55
OX2TFM		868,46										

RECEIVER WITH FLOR SYSTEM - TECHNICAL SPECIFICATIONS

Code	Reception frequency (MHz)	Input impedance (Ohm)	Sensitivity	Power supply	Absor. when quiescent	Encoding	Number of channels	Relay contact	Dimensions (mm)
SMXI	433.92 quartz controlled	52	> 0,5 µV for signals with successful outcomes	5 Vdc	-	52 digital bits (4.5 million billion comb.)	4	-	50x18x46 h

ACCESSORIES - TECHNICAL SPECIFICATIONS

Code	Reception frequency (MHz)	Impedance (Ohm)	Bracket	Cablec
ABF	433,92	50	stainless steel	RG 58

Our products and technologies
are protected with patents and design
trademark registrations. Any violation
of our rights will be legally prosecuted.

We make even the smallest of gestures extraordinary.

Nice,
a world without barriers.

Automation and control systems for gates, garage doors, blinds, awnings and rolling shutters and alarm systems for all types of space, from private homes to large public buildings.

www.niceforyou.com

Nice SpA
Oderzo, TV, Italy

Nice

NiceLoveEarth

Nice cares for the environment.
Using natural paper it avoids excessive use of raw materials and forest exploitation.
Waste is reduced, energy is saved and climate quality is improved.

CATGD19/EN/00/11-19 • The information shown in this publication is purely indicative. Nice reserves the right to make any modifi cations to the products as it sees fit. **Product Design** Roberto Gherlenda